(19) Europäisches Patentamt
European Patent Office
Office européen des brevets

(11) EP 3 995 005 A1

(12) EUROPEAN PATENT APPLICATION
published in accordance with Art. 153(4) EPC

(43) Date of publication:
11.05.2022 Bulletin 2022/19

(21) Application number: **20835265.8**

(22) Date of filing: **29.06.2020**

(51) International Patent Classification (IPC):
A24D 1/02 *(2006.01)* ***A24D 1/20*** *(2020.01)*
A24F 40/20 *(2020.01)*

(52) Cooperative Patent Classification (CPC):
A24D 1/02; A24D 1/20; A24F 40/20

(86) International application number:
PCT/JP2020/025454

(87) International publication number:
WO 2021/002309 (07.01.2021 Gazette 2021/01)

(84) Designated Contracting States:
AL AT BE BG CH CY CZ DE DK EE ES FI FR GB GR HR HU IE IS IT LI LT LU LV MC MK MT NL NO PL PT RO RS SE SI SK SM TR
Designated Extension States:
BA ME
Designated Validation States:
KH MA MD TN

(30) Priority: **01.07.2019 JP 2019123126**

(71) Applicant: **Japan Tobacco Inc.**
Tokyo 105-6927 (JP)

(72) Inventor: **NANASAKI, Yusuke**
Tokyo 130-8603 (JP)

(74) Representative: **Hoffmann Eitle**
Patent- und Rechtsanwälte PartmbB
Arabellastraße 30
81925 München (DE)

(54) HEAT-NOT-BURN TOBACCO PRODUCT AND ELECTRICALLY HEATED TOBACCO PRODUCT

(57) This heat-not-burn tobacco product is provided with a tobacco rod part and a mouthpiece part, and has a wrapped part in which these members are wrapped with tipping paper. A lip release agent is applied to at least a portion of the tipping paper. The wrapped part is constituted from a first region including a mouthpiece-side end of the heat-not-burn tobacco product and a second region positioned on the tobacco rod part side of the first region in the wrapped part. The first region is a region where the temperature is less than 230°C when the heat-not-burn tobacco product is used. The first region and the second region satisfy the following condition (A). (A): (Lip release agent content per unit area of first region) > (Lip release agent content per unit area of second region)

FIG. 1

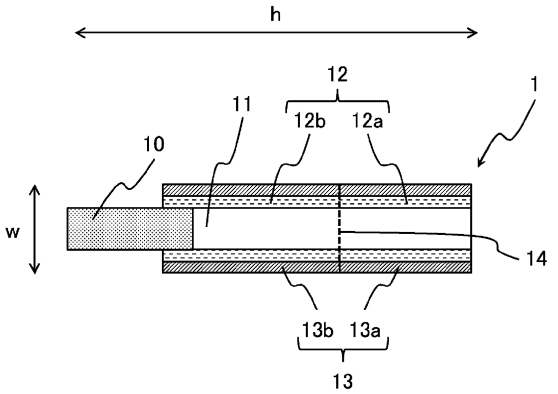

EP 3 995 005 A1

Description

Technical Field

[0001] The present invention relates to a heat-not-burn tobacco product and an electrically heated tobacco product.

Background Art

[0002] An electrically heated tobacco product including an electric heating device and a heat-not-burn tobacco product has been developed, the electric heating device including a heater member, a battery unit that serves as a power source for the heater member, and a control unit for controlling the heater member, and the heat-not-burn tobacco product being inserted into the electric heating device such that the heat-not-burn tobacco product comes into contact with the heater member (PTL 1). The heat-not-burn tobacco product generally includes a tobacco rod formed by wrapping shredded tobacco, an aerosol-source material, etc. with wrapping paper; a mouthpiece through which an aerosol generated from the tobacco rod when the tobacco rod is heated is inhaled; and tipping paper with which the tobacco rod and the mouthpiece are wrapped.

[0003] The electrically heated tobacco product is used by inserting the heat-not-burn tobacco product into the electric heating device. The heater member is caused to generate heat to heat the tobacco rod from the location at which the tobacco rod is in contact with the heater member, so that the aerosol-source material contained in the tobacco rod is delivered to the user together with smoke flavor and taste components.

[0004] In the technical fields related to tobacco, in particular, in the field of heat-not-burn tobacco products, improvements of smoke flavor and taste are desired.

Citation List

Patent Literature

[0005] PTL 1: Japanese Unexamined Patent Application Publication No. 2018-191652

Summary of Invention

Technical Problem

[0006] In the technical field of the heat-not-burn tobacco product, it is desirable to reduce generation of components having an undesired influence on, for example, smoke taste. In this field, little research has been done on a coating agent for the tipping paper to satisfy such a desire.

[0007] An example of the coating agent for the tipping paper is a lip release agent applied to reduce sticking of the tipping paper to the user's lips.

[0008] The inventor of the present invention has found that a component of the lip release agent applied to the tipping paper is decomposed when the lip release agent is heated during use of the heat-not-burn tobacco product, and that the decomposed component contributes to an increase in the amount of a substance having an undesired influence on, for example, smoke taste.

[0009] Accordingly, an object of the present invention is to provide a heat-not-burn tobacco product and an electrically heated tobacco product in which the amount of a substance generated from a component of a lip release agent during use of the heat-not-burn tobacco product and having an undesired influence on, for example, smoke taste is reduced.

Solution to Problem

[0010] As a result of intensive studies, the inventor of the present invention has arrived at the present invention based on the following findings. That is, when the content of the lip release agent is within a specific range in a specific region of a wrapped part that is wrapped with the tipping paper, peeling of the lip skin can be avoided, that is, appropriate lip release properties can be obtained, and the amount of the substance generated during use of the heat-not-burn tobacco product and having an undesired influence on, for example, smoke taste can be reduced.

[0011] The gist of the present invention is as follows:

[1] A heat-not-burn tobacco product comprising a tobacco rod part, a mouthpiece part, and a wrapped part in which the tobacco rod part and the mouthpiece part are wrapped with tipping paper,

wherein a lip release agent is applied to at least a portion of the tipping paper,
wherein the wrapped part consists of a first region including a mouthpiece-side end of the heat-not-burn tobacco product and a second region positioned on a tobacco rod part side of the first region in the wrapped part,
wherein the first region is a region in which a temperature is less than 230°C during use of the heat-not-burn tobacco product, and
wherein the first region and the second region satisfy a following condition (A):

(A) (a content of the lip release agent per unit area in the first region) > (a content of the lip release agent per unit area in the second region).

[2] The heat-not-burn tobacco product according to [1], wherein the first region is a region in which a temperature is less than 120°C during use of the heat-not-burn tobacco product.
[3] The heat-not-burn tobacco product according to [1], wherein the first region is a region in which a temperature is less than 100°C during use of the heat-not-burn tobacco product.
[4] The heat-not-burn tobacco product according to [1], wherein the first region is a region in which a temperature is less than 80°C during use of the heat-not-burn tobacco product.
[5] The heat-not-burn tobacco product according to any one of [1] to [4], wherein a boundary between the first region and the second region is on a mouthpiece side of a mouthpiece-side end of a heater member that heats the heat-not-burn tobacco product during use of the heat-not-burn tobacco product.
[6] The heat-not-burn tobacco product according to any one of [1] to [5], wherein the mouthpiece part comprises a cooling portion and a filter portion.
[7] The heat-not-burn tobacco product according to any one of [1] to [6], wherein a ratio of the content of the lip release agent per unit area in the second region to the content of the lip release agent per unit area in the first region is 1/2 or less.
[8] The heat-not-burn tobacco product according to [7], wherein the ratio of the content of the lip release agent per unit area in the second region to the content of the lip release agent per unit area in the first region is 1/4 or less.
[9] The heat-not-burn tobacco product according to any one of [1] to [8], wherein the content of the lip release agent per unit area in the second region is less than 0.56 $\mu g/mm^2$.
[10] The heat-not-burn tobacco product according to any one of [1] to [9], wherein the lip release agent contains at least nitrocellulose or ethyl cellulose.
[11] An electrically heated tobacco product comprising an electric heating device and the heat-not-burn tobacco product according to any one of [1] to [10], the electric heating device comprising a heater member, a battery unit that serves as a power source for the heater member, and a control unit for controlling the heater member, and the heat-not-burn tobacco product being inserted into the electric heating device such that the heat-not-burn tobacco product comes into contact with the heater member.

Advantageous Effects of Invention

[0012] The present invention provides a heat-not-burn tobacco product and an electrically heated tobacco product in which the amount of a substance generated from a component of a lip release agent during use of the heat-not-burn tobacco product and having an undesired influence on, for example, smoke taste is reduced.

Brief Description of Drawings

[0013]

[Fig. 1] Fig. 1 is a schematic diagram illustrating a heat-not-burn tobacco product according to an embodiment.
[Fig. 2] Fig. 2 is a schematic diagram illustrating partial modifications of the heat-not-burn tobacco product according to the embodiment.
[Fig. 3] Fig. 3 is a schematic diagram illustrating a partial modification of the heat-not-burn tobacco product according to the embodiment.
[Fig. 4] Fig. 4 is a schematic diagram illustrating examples of openings in the heat-not-burn tobacco product according to the embodiment.
[Fig. 5] Fig. 5 is a schematic diagram illustrating an electrically heated tobacco product according to an embodiment in which an outer peripheral surface of a tobacco rod part is heated.
[Fig. 6] Fig. 6 is a schematic diagram illustrating an electrically heated tobacco product according to an embodiment in which an inner portion of the tobacco rod part is heated.

Description of Embodiments

[0014] Embodiments of the present invention will now be described in detail. However, the embodiments described below are examples (representative examples) of the embodiments of the present invention, and the present invention is not limited thereto as long as the gist thereof is maintained.

[0015] In the schematic diagrams of Figs. 1 to 6 illustrating heat-not-burn tobacco products, various components are enlarged or reduced in size as appropriate to facilitate illustration, and are not illustrated in actual sizes and ratios according to the embodiments of the present invention.

[0016] The concept of a wrapped part is a part including tipping paper and a lip release agent applied to the tipping paper.

[0017] In addition, in this specification, an "outer side" of the wrapped part means a side that comes into contact with the user's lips during use of the heat-not-burn tobacco product, and an "inner side" of the wrapped part is a side opposite to the above-described side.

[0018] In addition, in this specification, when a range is specified by using numerical values or physical property values with "to" therebetween, it is to be understood that the range includes the values on both sides.

<1. Heat-Not-Burn Tobacco Product>

[0019] A heat-not-burn tobacco product according to an embodiment of the present invention (hereinafter also referred to simply as a "heat-not-burn tobacco product") includes a tobacco rod part, a mouthpiece part, and a wrapped part in which the tobacco rod part and the mouthpiece part are wrapped with tipping paper.

[0020] A lip release agent is applied to at least a portion of the tipping paper.

[0021] The wrapped part consists of a first region and a second region in a longitudinal direction of the heat-not-burn tobacco product, the first region including a mouthpiece-side end of the heat-not-burn tobacco product, and the second region being positioned on a tobacco rod part side of the first region in the wrapped part.

[0022] The temperature in the first region is less than 230°C during use of the heat-not-burn tobacco product.

[0023] The first region and the second region satisfy the following condition (A):

(A) (a content of the lip release agent per unit area in the first region) > (a content of the lip release agent per unit area in the second region).

[0024] Fig. 1 illustrates an example of the heat-not-burn tobacco product according to the above-described embodiment. The heat-not-burn tobacco product will now be described with reference to Fig. 1. Although the lip release agent is applied to one side of the tipping paper at a uniform density over the entire area thereof in Fig. 1, the lip release agent is not limited to this, and may instead be applied at different densities depending on the locations. This also applies to other figures.

[0025] The direction denoted by h in Fig. 1 is the longitudinal direction of the heat-not-burn tobacco product.

[0026] The heat-not-burn tobacco product is preferably a rod-shaped object having an aspect ratio of 1 or more, the aspect ratio being defined as follows:

$$\text{aspect ratio} = h/w$$

where w is the width of the bottom surface of the rod-shaped object (width of the tobacco rod part-side bottom surface in this specification), and h is the height. Preferably, $h \geq w$ is satisfied. As described above, in this specification, the longitudinal direction is defined as the direction denoted by h Therefore, even when $w \geq h$, the direction denoted by h is referred to as the longitudinal direction for convenience. The shape of the bottom surface is not limited, and may be, for example, a polygonal shape, a rounded polygonal shape, a circular shape, or an elliptical shape. When the bottom surface is circular, the width w is the diameter. When the bottom surface is elliptical, the width w is the length along the major axis. When the bottom surface is polygonal or rounded polygonal, the width w is the diameter of a circumcircle or the length along the major axis of a circumscribed ellipse. In the embodiment illustrated in Fig. 1, for example, the bottom surface is circular, and therefore the width w is the diameter thereof. The diameter is the width w, and the length in a direction orthogonal to the bottom surface is the height h.

[0027] The length h of the heat-not-burn tobacco product in the longitudinal direction is not particularly limited. For example, the length h is typically 35 mm or more, preferably 40 mm or more, and more preferably 45 mm or more. In addition, the length h is typically 105 mm or less, preferably 95 mm or less, and more preferably 85 mm or less.

[0028] The width w of the bottom surface of the rod-shaped body of the heat-not-burn tobacco product is not particularly limited. For example, the width w is typically 5 mm or more, and preferably 5.5 mm or more. In addition, the width w is typically 10 mm or less, preferably 9 mm or less, and more preferably 8 mm or less.

[0029] Components of the heat-not-burn tobacco product will now be described.

<1-1. Wrapped Part>

[First Region and Second Region of Wrapped Part]

[0030] As illustrated in Fig. 1, a wrapped part, in which a tobacco rod part 10 and a mouthpiece part 11 are wrapped with tipping paper 12, consists of a first region 12a and a second region 12b. Although not illustrated in Fig. 1, as described below, the tobacco rod part 10 is formed by wrapping a tobacco filler with wrapping paper. A lip release agent 13 is applied to at least a portion of the tipping paper.

[0031] The first region 12a is a region including a mouthpiece-side end of the heat-not-burn tobacco product in the longitudinal direction of the heat-not-burn tobacco product. The second region 12b is a region positioned on a tobacco rod part side of the first region in the wrapped part. The first region and the second region are adj acent to each other.

[0032] The first region is a region in which the temperature is less than 230°C during use of the heat-not-burn tobacco product.

[0033] The temperature is a maximum temperature of the surface of the wrapped part in the first region, and is measured by a method described below.

[0034] When the temperature in the first region reaches or exceeds 230°C during use of the heat-not-burn tobacco product, the lip release agent applied in the first region is excessively heated. Accordingly, generation of a substance having an undesired influence on, for example, smoke taste is increased.

[0035] The first region is preferably a region in which the temperature is less than 120°C, more preferably a region in which the temperature is less than 100°C, and still more preferably a region in which the temperature is less than 80°C during use of the heat-not-burn tobacco product. When the temperature is in the above-described ranges, the lip release agent applied in the first region is not excessively heated. Therefore, generation of the substance having an undesired influence on, for example, smoke taste can be reduced.

[0036] The first region and the second region satisfy the following condition (A):

(A) (the content of the lip release agent per unit area in the first region) > (the content of the lip release agent per unit area in the second region).

[0037] In Fig. 1, the lip release agent in the first region is denoted by 13a, and the lip release agent in the second region is denoted by 13b.

[0038] The content of the lip release agent per unit area in the first region may be referred to simply as an "amount of the lip release agent in the first region", and the content of the lip release agent per unit area in the second region may be referred to simply as an "amount of the lip release agent in the second region". The content of the lip release agent per unit area in the second region is obtained by dividing the total amount of lip release agent in the second region by the overall surface area of the second region.

[0039] In a heat-not-burn tobacco product according to the related art, the lip release agent is applied to a surface of the tipping paper with which the user's lips may come into contact (hereinafter referred to as an outer surface) over the entire area thereof, and the density of the lip release agent is not varied over the surface. In other words, the lip release agent is not applied to satisfy the above-described condition (A). In this case, although the purpose of applying the lip release agent, which is to obtain sufficient lip release properties, is achieved, a portion of the lip release agent is directly or indirectly heated by a heater member described below during use of the heat-not-burn tobacco product, and generation of substances from the lip release agent occurs. Thus, generation of the substance having an undesired influence on smoke taste cannot be reduced.

[0040] In contrast, when the lip release agent is applied to satisfy the above-described condition (A), the lip release agent in the first region provides sufficient lip release properties. In addition, since the amount of the lip release agent in the second region is less than the amount of the lip release agent in the first region, compared to the above-described heat-not-burn tobacco product according to the related art, generation of substances from the lip release agent during use is reduced. As a result, generation of the substance having an undesired influence on smoke taste can be reduced.

[0041] A boundary 14 between the first region and the second region illustrated in Fig. 1 is preferably on a mouthpiece side of a mouthpiece-side end of the heater member in the heat-not-burn tobacco product. The heater member heats the heat-not-burn tobacco product during use of the heat-not-burn tobacco product.

[0042] The boundary between the first region and the second region may be positioned such that the distance thereof from the mouthpiece-side end in the longitudinal direction of the heat-not-burn tobacco product is 31.5 to 33.5 mm, preferably 32.5 mm, 26.5 to 28.5 mm, preferably 27.5 mm, 24.0 to 26.0 mm, preferably 25.0 mm, 18.0 to 20.0 mm, preferably 19.0 mm, 16.0 to 17.9 mm, preferably 17.0 mm, 14.0 to 15.9 mm, preferably 15.0 mm, 12.0 to 13.9 mm, preferably 13.0 mm, or 9.0 to 10.9 mm, preferably 10.0 mm

[0043] When the boundary between the first region and the second region is positioned as described above, the lip release agent applied in the first region is not excessively heated. Therefore, generation of the substance having an undesired influence on, for example, smoke taste can be reduced.

[0044] When the boundary between the first region and the second region is positioned such that the distance thereof from the mouthpiece-side end in the longitudinal direction of the heat-not-burn tobacco product is greater than 32.5 mm, the lip release agent is excessively heated by a heater member of an electric heating device, which will be described below. Therefore, generation of the substance having an undesired influence on smoke taste cannot be reduced. When the boundary between the first region and the second region is positioned such that the distance thereof from the mouthpiece-side end in the longitudinal direction of the heat-not-burn tobacco product is less than 10.0 mm, it is difficult to obtain sufficient lip release properties.

[0045] The wrapped part of the heat-not-burn tobacco product may or may not be in contact with the heater member that heats the heat-not-burn tobacco product during use of the heat-not-fuel tobacco product. A configuration in which the wrapped part is in contact with the heater member may be such that the heat-not-burn tobacco product is heated by the heater member from the outer peripheral surface thereof. In this case, since the heater member does not come into direct contact with the tobacco filler, maintenance of the heater member can be simplified. A configuration in which the wrapped part is not in contact with the heater member may be such that the heat-not-burn tobacco product is heated by the heater member from the inside of the tobacco rod part. In this case, compared to the configuration in which the outer peripheral surface of the heat-not-burn tobacco product is heated, dissipation of the heat generated by the heater member to the outside is reduced. Therefore, the heater temperature can be easily increased.

[Structure of Wrapped Part]

[0046] The structures of the tipping paper included in the wrapped part and the lip release agent applied thereto are not particularly limited. As illustrated in Fig. 1, the lip release agent is generally applied to a surface of a single sheet of tipping paper over the entire area thereof. However, forms illustrated in Figs. 2(a) to 2(f) described below and combinations thereof may also be employed.

Fig. 2(a): Form in which a single sheet of tipping paper has a portion to which no lip release agent is applied.
Fig. 2(b): Form in which a single sheet of tipping paper has no lip release agent applied in the second region.
Fig. 2(c): Form in which a single sheet of tipping paper has a lip release agent having a density gradient along the surface thereof.
Fig. 2(d): Form in which a lip release agent is applied to two or more sheets of tipping paper arranged to overlap.
Fig. 2(e): Form in which a lip release agent is applied to each of two or more sheets of tipping paper arranged to overlap.
Fig. 2(f): Form in which a lip release agent is applied to two or more sheets of tipping paper arranged to partially overlap.

[0047] Among the forms illustrated in Figs. 2(a) to 2(f), the form illustrated in Fig. 2(b) is preferably employed to reduce the amounts of substances generated from the lip release agent during use.

[0048] The sizing degree of the wrapped part in the first region is not particularly limited. However, to improve separation from the lips after use, the sizing degree is typically 0.2 seconds or more, preferably 0.3 seconds or more, and more preferably 0.4 seconds or more. In addition, the sizing degree is typically 2.0 seconds or less, preferably 1.5 seconds or less, and more preferably 1.0 seconds or less.

[0049] The sizing degree of the wrapped part in the second region is not particularly limited. However, considering the effects on smoke taste, the sizing degree is typically 0.01 seconds or more, preferably 0.03 seconds or more, and more preferably 0.05 seconds or more. In addition, the sizing degree is typically 0.20 seconds or less, preferably 0.15 seconds or less, and more preferably 0.10 seconds or less.

[0050] The sizing degree may be measured under the following conditions:

Measurement Device: Surface & Sizing Tester Model EST 12 (manufactured by Nihon Rufuto Co., Ltd.)

Sample (Test Paper): Paper placed in an environment at a temperature of 23°C and a humidity of 50 RH% for 24 hours and then cut into the size of 20 mm × 70 mm.

Measurement Method: The test paper is immersed in test liquid (water) that fills a measurement cell of the above-described measurement device. From that time, low-energy ultrasonic waves are emitted in a thickness direction. Wetting and impregnation of the test paper from the time when the test paper has come into contact with the test liquid can be evaluated by measuring the change over time in the intensity of the ultrasonic waves received by an

ultrasonic wave receiver. In the present invention, assuming that a measurement start time is the time when the test paper is completely immersed in the test liquid, the sizing degree is the time from the measurement start time to the time when a permeability peak that is obtained is at a maximum value (MAX value).

[0051] To improve separation from the lips after use, the contact angle between the wrapped part and water is preferably 90° or more, more preferably 100° or more, in both the first region and the second region.

[0052] The contact angle can be measured under the following conditions:

Measurement Device: Contact Angle Meter Model DMC-MC3 (manufactured by Kyowa Electronic Instruments Co., Ltd.)

Sample (Test Paper): Paper placed in an environment at a temperature of 23°C and a humidity of 50 RH% for 24 hours and then cut into the size of 20 mm × 70 mm.

Measurement Method: The test paper is attached to a slide glass with double-sided tape. The contact angle can be measured by using the θ/2 method as the contact angle evaluation method with an amount of liquid (water) droplet of 7 μL and a measurement start time of 1,000 ms.

[Tipping Paper]

[0053] The material of the tipping paper included in the wrapped part 12 is not particularly limited, and may be, for example, paper made from general vegetable fibers (pulp), a sheet made from polymer-based (polypropylene, polyethylene, nylon, etc.) chemical fibers, a polymer-based sheet, or metal foil such as aluminum foil. The tipping paper referred to herein means a sheet that connects a plurality of segments of the heat-not-burn tobacco product, for example, the tobacco rod part and the mouthpiece part.

[0054] The method for manufacturing the tipping paper is not particularly limited, and a general method may be used. For example, when the main component is pulp, the texture may be arranged to be uniform in a papermaking process using a Fourdrinier paper machine, a cylinder paper machine, a cylinder-tanmo complex paper machine, or the like. If necessary, a wet paper strengthening agent may be added to impart water resistance to the wrapping paper, or a sizing agent may be added to adjust the state of printing on the wrapping paper. Furthermore, internal additives for papermaking such as aluminum sulfate, various anionic, cationic, nonionic, or amphoteric yield enhancers, freeness improvers, and paper strengthening agents, and additives for paper manufacturing such as dyes, pH adjusters, antifoaming agented, pitch control agents, and slime control agents may be added.

[0055] The pulp may be made of wood pulp, such as softwood pulp or hardwood pulp, or may be produced by mixing non-wood pulps, such as flax pulp, cannabis pulp, sisal pulp, and esparto, that are commonly used to produce wrapping paper for smoking articles. Examples of types of pulps that may be used include chemical pulp produced by, for example, kraft pulping, acidic, neutral, or alkaline sulfite pulping, or soda chlorine pulping, ground pulp, chemiground pulp, and thermomechanical pulp.

[0056] The height of the tipping paper 11 in the longitudinal direction is not particularly limited. However, in consideration of the amount of aerosol that is delivered and production suitability, the height is typically 15 mm or more, preferably 20 mm or more, and more preferably 25 mm or more. In addition, the height is typically 55 mm or less, and preferably 50 mm or less.

[0057] The thickness of the tipping paper 11 is not particularly limited. However, in consideration of the amount of aerosol that is delivered and production suitability, the thickness is typically 30 μm or more, and preferably 35 μm or more. In addition, the thickness is typically 150 μm or less, and preferably 140 μm or less.

[0058] The basis weight of the tipping paper 11 is not particularly limited. However, in consideration of the amount of aerosol that is delivered and production suitability, the basis weight is typically 30 g/m^2 or more, and preferably 35 g/m^2 or more. In addition, the basis weight is typically 150 g/m^2 or less, and preferably 140 g/m^2 or less.

[0059] The air permeability of the tipping paper 11 is not particularly limited. However, in consideration of the amount of aerosol that is delivered and production suitability, the air permeability is preferably 10 Coresta units or less.

<1-2. Lip Release Agent>

[0060] The solid content of the lip release agent according to the present embodiment may be 100% nitrocellulose, 100% ethyl cellulose, or a mixture of nitrocellulose and ethyl cellulose at any ratio in consideration of ease of analysis and an actual solid content. The solid content of the lip release agent may instead be a mixture that additionally contains

a component other than nitrocellulose and/or ethyl cellulose.

[0061] In the field of heat-not-burn tobacco products, the influence of the lip release agent on smoke taste, for example, has not been researched. The inventor of the present invention has prepared a heat-not-burn tobacco product including a wrapped part having the lip release agent applied over the entire surface thereof and a heat-not-burn tobacco product satisfying the above-described condition (A), and conducted an experiment for comparing them in terms of the content of TSNA in the heat-not-burn tobacco product after use. The result showed that the heat-not-burn tobacco product including the wrapped part with the lip release agent applied over the entire surface thereof contained a larger amount of TSNA than the heat-not-burn tobacco product satisfying condition (A). The inventor of the present invention considered the reason for this to be as follows.

[0062] A typical component of the lip release agent is nitrocellulose, which is a nitric ester of cellulose. Nitrocellulose is generally obtained by processing cellulose with a mixed acid of nitric acid and sulfuric acid. When heated, nitrocellulose is decomposed and nitric acid is generated. The generated nitric acid reacts with minor alkaloid contained in the material of the tobacco product, and TSNA is generated as a result. In the heat-not-burn tobacco product including the wrapped part with the lip release agent applied over the entire surface thereof, the region in which the lip release agent is heated is larger than that in the heat-not-burn tobacco product including the wrapped part with the lip release agent applied to a portion thereof. Therefore, heat from a heater is directly or indirectly transmitted to the lip release agent, and a portion of the lip release agent is excessively heated. This is considered to be the reason for the above-described result.

[0063] TSNA is a generic term for tobacco-specific nitrosamines. Typical Examples of TSNA include N'-nitrosonornicotine (NNN), 4-(N-nitrosomethylamino)-1-(3-pyridyl)-1-butanone (NNK), N'-nitrosoanatabine (NAT), and N'-nitrosoanabasine (NAB).

[0064] When the lip release agent contains nitrocellulose, TSNA is generated as described above. The lip release agent also contains components other than nitrocellulose that may generate a substance having an undesired influence on, for example, smoke taste. For example, ethyl cellulose that may be contained in the lip release agent may cause an undesirable change in, for example, smoke taste.

[0065] The material contained in the lip release agent according to the present embodiment is not particularly limited, and may be, for example, nitrocellulose, ethyl cellulose, or a mixture thereof. In terms of reduction in the generation of TSNA, a particularly advantageous effect can be achieved when the lip release agent contains nitrocellulose.

[0066] The lip release agent may contain components other than nitrocellulose and ethyl cellulose described above. For example, a filler, such as calcium carbonate, may be contained. The components of the lip release agent may be commercially available materials.

[0067] The method for applying the lip release agent to the tipping paper is not particularly limited, and a general coating method may be used. The lip release agent may be prepared in the form of a typically 1.0 to 30.0 wt% aqueous solution or ethyl acetate solution, and the aqueous solution or the ethyl acetate solution may be applied to the tipping paper according to the embodiment of the present invention by using, for example, a suitable printing method such as gravure printing. The lip release agent may instead be applied to the tipping paper according to the embodiment of the present invention by known means other than printing, such as a method for applying non-transparent ink by inkjet printing, a spraying method, or an impregnation method.

[0068] The lip release agent is applied to at least a portion of the tipping paper. To reduce generation of the substance having an undesired influence on smoke taste, the lip release agent is preferably applied in at least a portion of the above-described first region, which is a region in which the lip release agent is not excessively heated by the heater member of the electric heating device described below. It is also preferable to apply the lip release agent over the entirety of this region. To obtain sufficient lip release properties, the lip release agent is preferably applied in at least a portion of a region in which a filter portion described below, which may be included in the mouthpiece part, is disposed directly under the tipping paper. It is also preferable to apply the lip release agent over the entirety of this region.

[0069] The lip release agent needs to be applied to at least a portion of the outer surface of the tipping paper in the first region. The lip release agent may be additionally applied to the inner surface of the tipping paper. However, to reduce the amounts of substances generated from the lip release agent during use, the lip release agent is preferably not applied to the inner surface of the tipping paper.

[Content of Lip Release Agent]

[0070] As described above, the content of the lip release agent satisfies condition (A).

[0071] When condition (A) is satisfied, sufficient lip release properties can be achieved, and generation of substances from the lip release agent during use can be reduced. Accordingly, the amount of the substance having an undesired influence on smoke taste can be reduced.

[0072] The ratio of the content of the lip release agent per unit area in the second region to the content of the lip release agent per unit area in the first region is not particularly limited. However, to ensure sufficient lip release properties and reduce the amounts of substances generated from the lip release agent during use, the ratio is preferably 1/2 or less,

more preferably 1/4 or less, particularly preferably 1/6 or less, and most preferably 1/8 or less.

[0073] The content of the lip release agent per unit area in the first region is not particularly limited as long as it is greater than the content of the lip release agent per unit area in the second region, but is typically 0.20 $\mu g/mm^2$ or more and 1.00 $\mu g/mm^2$ or less, and preferably 0.25 $\mu g/mm^2$ or more and 0.75 $\mu g/mm^2$ or less.

[0074] The content of the lip release agent per unit area in the second region is not particularly limited. However, to reduce the amounts of substances generated from the lip release agent during use, to reduce the amounts of substances generated from the lip release agent during use, the content of the lip release agent per unit area in the second region is preferably less than 0.56 $\mu g/mm^2$, more preferably less than 0.28 $\mu g/mm^2$, particularly preferably less than 0.14 $\mu g/mm^2$, and most preferably 0 $\mu g/mm^2$, which means that no lip release agent is applied.

[0075] The method for measuring the content of the lip release agent is not particularly limited. For example, the tipping paper of the wrapped part is removed from the heat-not-burn tobacco product, and is cut into the first region and the second region. Then, the weight is measured for each region, and the weight of the applied lip release agent is calculated by subtracting the weight of the tipping paper in each region. Then, the calculated weight is divided by the area of each region to determine the content of the lip release agent per unit area in each of the first region and the second region.

[0076] If possible, a value obtained by dividing the weight of the lip release agent applied during manufacture by the area may be used. Alternatively, a value obtained by dividing the weight of the applied lip release agent determined from a change in weight of the tipping paper caused by the application of the lip release agent by the area of the subject region may be used.

[0077] The lip release agent turns brown in color when heated to a certain level. Therefore, as a simple method for roughly estimating the content of the lip release agent, a change in color of the surface of the tipping paper after use of the heat-not-burn tobacco product may be observed.

[0078] The content of the lip release agent can also be measured by an absorptiometric measurement. For example, when nitrocellulose is used as the lip release agent, the content thereof can be calculated by a method described below.

[0079] First, a calibration-curve standard sample is produced by a method described below, and is subjected to an absorptiometric measurement. In accordance with ASTM D3133-01, a calibration curve is created from the result of the absorptiometric measurement performed on the calibration-curve standard sample. Then, a measurement sample is produced by a method described below, and is subjected to an absorptiometric measurement. The weight of nitrocellulose contained in the measurement sample can be determined from the above-described calibration curve and the result of the absorptiometric measurement performed on the measurement sample. The amount of the lip release agent applied in the subject region can be determined by dividing the weight by the area of the subject region.

[0080] When the component of the lip release agent is other than nitrocellulose, the content thereof may be similarly measured by, for example, replacing acetone described below with a solvent capable of dissolving the component and changing the absorption wavelength.

<Production of Calibration-Curve Standard Sample>

[0081]

(1) About 6 g of standard sample (lip release agent before application) is placed in a container, such as a recovery flask, and is concentrated by evaporating volatile components by using an evaporator.

(2) The resulting non-volatile component is transferred to a 100 ml volumetric flask with a pipet while being dissolved in acetone, and is diluted with acetone to 100 ml.

(3) Four 50 ml recovery flasks are prepared, and 0, 1, 3, and 5 ml of the solution obtained in (2) are placed in the respective recovery flasks. Then, 10, 9, 7, and 5 ml of acetone are added so that the total amount is 10 ml in each recovery flask. Then, 10 ml of 10% KOH is added to each of the recovery flasks. The recovery flasks are set to cooling tubes, and reflux is performed for 1 hour in a constant-temperature water bath at 60°C.

(4) After the reflux, the solutions are cooled to room temperature on ice and filtrated by using filter paper. The resulting filtrate is placed in a 50 ml volumetric flask, and is diluted with a mixed solution of acetone/water (weight ratio is 2/1).

<Production of Measurement Sample (for First Region)>

[0082]

(1) The tipping paper of the wrapped part is removed from the heat-not-burn tobacco product, and the first region is cut off and shredded. The shredded pieces of the tipping paper are placed in a container, such as an Erlenmeyer flask, and 100 ml of acetone is added. Then, ultrasonic extraction is performed for 30 minutes.

(2) The resulting extract is transferred to a 300 ml recovery flask, and acetone is evaporated by using an evaporator.

Then, 10 ml of acetone and 10 ml of 10% KOH are added, and reflux is performed for 1 hour in a hot water bath at 60°C. (3) The recovery flask is cooled to room temperature on ice and filtrated. The resulting filtrate is placed in a 50 ml volumetric flask, and is diluted with a mixed solution of acetone/water (weight ratio is 2/1).

<1-3. Tobacco Rod Part>

[0083] The structure of the tobacco rod part 10 is not particularly limited, and may be a general structure. For example, the tobacco rod part 10 may be obtained by wrapping a tobacco filler with wrapping paper.

[Tobacco Filler]

[0084] The structure of the tobacco filler is not particularly limited, and may be, for example, a structure composed of a composition containing shredded tobacco (hereinafter also referred to as a first tobacco filler), a structure composed of a plurality of tobacco sheets described below (hereinafter also referred to as a second tobacco filler), or a structure composed of a single tobacco sheet (hereinafter also referred to as a third tobacco filler).

[0085] The tobacco rod part (also referred to simply as a "tobacco rod" in this specification) preferably has a rod shape. In such a case, the aspect ratio, which is the ratio of the height of the tobacco rod part in the longitudinal direction to the width of the bottom surface of the tobacco rod part, is preferably 1 or more.

[0086] The shape of the bottom surface of the tobacco rod part is not limited, and may be, for example, a polygonal shape, a rounded polygonal shape, a circular shape, or an elliptical shape. When the bottom surface is circular, the width is the diameter. When the bottom surface is elliptical, the width is the length along the major axis. When the bottom surface is polygonal or rounded polygonal, the width is the diameter of a circumcircle or the length along the major axis of a circumscribed ellipse. In the embodiment illustrated in Fig. 1, for example, the bottom surface is circular, and therefore the width is the diameter thereof. The diameter is the width, and the length in the direction orthogonal to the bottom surface is the height. The height and width of the tobacco filler included in the tobacco rod part are preferably about 12 to 70 mm and about 4 to 9 mm, respectively.

[0087] The tobacco rod part may include a portion to be fitted to, for example, a heater member for heating the heat-not-burn tobacco product.

[0088] The first filler will now be described. The material of the shredded tobacco contained in the first filler is not particularly limited, and a known material, such as lamina and midrib, may be used. The material may be obtained by crushing and uniformizing dried tobacco leaves into particles having an average particle size of 20 to 200 μm, forming the particles into a sheet (hereinafter also referred to simply as a uniformized sheet), and cutting the uniformized sheet. Alternatively, a so-called strand type may be employed in which a uniformized sheet having a length similar to that of the tobacco rod part in the longitudinal direction of the tobacco rod part is cut in a direction substantially parallel to the longitudinal direction of the tobacco rod part into pieces with which the tobacco rod part is filled. The pieces of the shredded tobacco preferably have a width of 0.5 to 2.0 mm to ensure appropriate filling of the tobacco rod part therewith. When the tobacco rod part has a circumference of 22 mm and a length of 20 mm, the content of the tobacco filler in the tobacco rod part may be 200 to 800 mg/rod part, and is preferably 250 to 600 mg/rod. Tobacco leaves of various types of tobacco may be used to produce the shredded tobacco and the uniformized sheet. For example, flue-cured tobacco, burley tobacco, orient tobacco, domestic tobacco, other types of nicotiana tabacum or nicotiana rustica, or a mixture thereof may be used. The mixture may be obtained by blending the above-described types of tobacco as appropriate to produce a desired taste. Details on the types of tobacco are disclosed in "Tobacco Encyclopedia, Tobacco Academic Studies Center, 2009.3.31". There are a plurality of known methods for manufacturing the uniformized sheet, that is, for crushing tobacco leaves into pieces and forming the pieces into a uniformized sheet. The first method is to produce a sheet by using a papermaking process. The second method is a method of mixing a suitable solvent, such as water, and crushed tobacco leaves into a uniform mixture, casting the uniform mixture on a metal plate or a metal-plate belt, and drying the uniform mixture to produce a cast sheet. The third method is a method of mixing a suitable solvent, such as water, and crushed tobacco leaves into a uniform mixture and forming the uniform mixture into the form of a sheet by extrusion molding. The types of the uniformized sheet are disclosed in detail in "Tobacco Encyclopedia, Tobacco Academic Studies Center, 2009.3.31".

[0089] The water content of the tobacco filler may be 10 to 15 wt% of the total amount of the tobacco filler, and is preferably 11 to 13 wt% of the total amount of the tobacco filler. When the water content is in these ranges, formation of stains on the wrapping paper may be suppressed, and machinability during the production of the tobacco rod part may be improved.

[0090] The size and preparation method of the shredded tobacco contained in the first tobacco filler are not particularly limited. For example, shredded tobacco obtained by shredding dried tobacco leaves to a width of 0.5 to 2.0 mm may be used.

[0091] When the shredded tobacco is formed by crushing a uniformized sheet, dried tobacco leaves may be crushed

into uniform particles having an average particle size of 20 to 200 μm, and the particles may be formed into a sheet. Then, the sheet may be shredded to a width of 0.5 to 2.0 mm

[0092] The first tobacco filler contains an aerosol-source material that generates aerosol smoke. The type of the aerosol-source material is not particularly limited, and extracts from various natural products and/or components thereof can be selected depending on the intended use. Examples of the aerosol-source material include glycerol, propylene glycol, triacetin, 1,3-butanediol, and mixtures thereof.

[0093] The content of the aerosol-source material in the first tobacco filler is not particularly limited. To sufficiently generate an aerosol and impart a good smoke taste, the content of the aerosol-source material is typically 5 wt% or more, preferably 10 wt% or more, and is typically 50 wt% or less, preferably 15 to 25 wt%, of the total amount of the tobacco filler.

[0094] The first tobacco filler may contain a flavor. The type of the flavor is not particularly limited, and to impart a good smoke taste, acetanisole, acetophenone, acetylpyrazine, 2-acetylthiazole, alfalfa extract, amyl alcohol, amyl butyrate, trans-anethole, star anise oil, apple juice, Peru balsam oil, beeswax absolute, benzaldehyde, benzoin resinoid, benzyl alcohol, benzyl benzoate, benzyl phenylacetate, benzyl propionate, 2,3-butanedione, 2-butanol, butyl butyrate, butyric acid, caramel, cardamom oil, carob absolute, β-carotene, carrot juice, L-carvone, β-caryophyllene, cassia bark oil, cedarwood oil, celery seed oil, chamomile oil, cinnamaldehyde, cinnamic acid, cinnamyl alcohol, cinnamyl cinnamate, citronella oil, DL-citronellol, clary sage extract, cocoa, coffee, cognac oil, coriander oil, cuminaldehyde, davana oil, δ-decalactone, γ-decalactone, decanoic acid, dill herb oil, 3,4-dimethyl-1,2-cyclopentanedione, 4,5-dimethyl-3-hydroxy-2,5-dihydrofuran-2-one, 3,7-dimethyl-6-octenoic acid, 2,3-dimethylpyrazine, 2,5-dimethylpyrazine, 2,6-dimethylpyrazine, ethyl 2-methylbutyrate, ethyl acetate, ethyl butyrate, ethyl hexanoate, ethyl isovalerate, ethyl lactate, ethyl laurate, ethyl levulinate, ethyl maltol, ethyl octanoate, ethyl oleate, ethyl palmitate, ethyl phenylacetate, ethyl propionate, ethyl stearate, ethyl valerate, ethyl vanillin, ethyl vanillin glucoside, 2-ethyl-3, (5 or 6)-dimethylpyrazine, 5-ethyl-3-hydroxy-4-methyl-2(5H)-furanone, 2-ethyl-3-methylpyrazine, eucalyptol, fenugreek absolute, genet absolute, gentian root infusion, geraniol, geranyl acetate, grape juice, guaiacol, guava extract, γ-heptalactone, γ-hexalactone, hexanoic acid, cis-3-hexen-1-ol, hexyl acetate, hexyl alcohol, hexyl phenylacetate, honey, 4-hydroxy-3-pentenoic acid lactone, 4-hydroxy-4-(3-hydroxy-1-butenyl)-3,5,5-trimethyl-2-cyclohexen-1-one, 4-(para-hydroxyphenyl)-2-butanone, sodium 4-hydroxyundecanoate, immortelle absolute, β-ionone, isoamyl acetate, isoamyl butyrate, isoamyl phenylacetate, isobutyl acetate, isobutyl phenylacetate, jasmine absolute, kola nut tincture, labdanum oil, terpeneless lemon oil, licorice extract, linalool, linalyl acetate, lovage root oil, maltol, maple syrup, menthol, menthone, L-menthyl acetate, para-methoxybenzaldehyde, methyl-2-pyrrolyl ketone, methyl anthranilate, methyl phenylacetate, methyl salicylate, 4'-methylacetophenone, methylcyclopentenolone, 3-methylvaleric acid, mimosa absolute, molasses, myristic acid, nerol, nerolidol, γ-nonalactone, nutmeg oil, δ-octalactone, octanal, octanoic acid, orange flower oil, orange oil, orris root oil, palmitic acid, ω-pentadecalactone, peppermint oil, petitgrain Paraguay oil, phenethyl alcohol, phenethyl phenylacetate, phenylacetic acid, piperonal, plum extract, propenyl guaethol, propyl acetate, 3-propylidene phthalide, prune juice, pyruvic acid, raisin extract, rose oil, rum, sage oil, sandalwood oil, spearmint oil, styrax absolute, marigold oil, tea distillate, α-terpineol, terpinyl acetate, 5,6,7,8-tetrahydroquinoxaline, 1,5,5,9-tetramethyl-13-oxacyclo(8.3.0.0(4.9))tridecane, 2,3,5,6-tetramethylpyrazine, thyme oil, tomato extract, 2-tridecanone, triethyl citrate, 4-(2,6,6-trimethyl-1-cyclohexeiryl)2-buten-4-one, 2,6,6-trimethyl-2-cyclohexenc-1,4-dione, 4-(2,6,6-trimethyl-1,3-cyclohexadienyl)2-buten-4-one, 2,3,5-trimethylpyrazine, γ-undecalactone, γ-valerolactone, vanilla extract, vanillin, veratraldehyde, violet leaf absolute, N-ethyl-p-menthane-3-carboxamide (WS-3), and ethyl-2-(p-menthane-3-carboxamide) acetate (WS-5). Menthol is particularly preferred. These flavors may be used alone or in combination of two or more.

[0095] The content of the flavor in the first tobacco filler is not particularly limited. To impart a good smoke taste, the content is typically 10,000 ppm or more, preferably 20,000 ppm or more, and more preferably 25,000 ppm or more. In addition, the content is typically 50,000 ppm or less, preferably 40,000 ppm or less, and more preferably 33,000 ppm or less.

[0096] The filler density of the first tobacco filler is not particularly limited. To secure the performance of the heat-not-burn tobacco product and impart a good smoke taste, the filler density is typically 250 mg/cm^3 or more, and preferably 320 mg/cm^3 or more. In addition, the filler density is typically 800 mg/cm^3 or less, and preferably 600 mg/cm^3 or less.

[0097] The tobacco rod part is formed by wrapping the wrapping paper around the above-described first tobacco filler.

[0098] The second tobacco filler includes a plurality of tobacco sheets that are concentrically arranged. In this specification, the expression "concentrically arranged" means that all of the tobacco sheets are arranged such that the centers thereof are at substantially the same position. In this specification, the term "sheet" means an object having a pair of principal surfaces that are substantially parallel to each other and side surfaces. The second filler is formed by concentrically rolling a plurality of tobacco sheets in a direction orthogonal to the longitudinal direction of the heat-not-burn tobacco product.

[0099] The base material of the sheets may be, for example, a tobacco material, such as tobacco powder. The tobacco material is particularly preferred. Each tobacco sheet is preferably formed of a base material sheet made of the tobacco material and having a component capable of generating flavor as necessary. The tobacco sheet generates an aerosol

when heated. An aerosol source, for example, a polyol such as glycerol, propylene glycol, or 1,3-butanediol, may be added as the aerosol-source material. The amount of the aerosol-source material that is added is preferably 5 to 50 wt%, more preferably 15 to 25 wt%, of the weight of the dried tobacco sheets.

[0100] The tobacco sheets before being concentrically arranged will now be described.

[0101] A tobacco sheet may be appropriately manufactured by a known method, such as papermaking, a slurry method, or rolling. The uniformized sheet described in the description of the first tobacco filler may also be used.

[0102] In the case of papermaking, a tobacco sheet may be manufactured by a method including the following steps. 1) Dried tobacco leaves are coarsely crushed and extracted with water, and the water extract is separated from the residue. 2) The water extract is dried under reduced pressure and concentrated. 3) Pulp is added to the residue, and the resultant is fiberized with a refiner and subjected to a papermaking process. 4) The concentrated water extract is applied to a sheet obtained by the papermaking process, and is dried. Thus, a tobacco sheet is obtained. In this case, a step of removing some of the components, such as nitrosamines, may be additionally performed (see Japanese Unexamined Patent Application Publication (translation of PCT Application) No. 2004-510422).

[0103] In the case of a slurry method, a tobacco sheet may be manufactured by a method including the following steps. 1) Water, pulp, a binder, and crushed tobacco leaves are mixed. 2) The mixture is thinly spread (casted) and dried. In this case, a step of removing some of the components, such as nitrosamines, by irradiating the slurry of the mixture of water, pulp, the binder, and the crushed tobacco leaves with ultraviolet rays or X-rays may be additionally performed.

[0104] Alternatively, as described in International Publication No. 2014/104078, a tobacco sheet having the form of a non-woven fabric manufactured by a method including the following steps may be used. 1) Powdered tobacco leaves and a binder are mixed. 2) The mixture is placed between sheets of non-woven fabric. 3) The resulting stack is formed into a certain shape by heat fusing to form a tobacco sheet having the form of non-woven fabric.

[0105] The types of tobacco leaves used as the material for the above-described methods may be the same as those mentioned above in the description of the first filler.

[0106] The composition of the tobacco sheet is not particularly limited. For example, the content of the tobacco material (tobacco leaves) is preferably 50 to 95 wt% of the total weight of the tobacco sheet. The tobacco sheet may contain a binder. Examples of the binder include guar gum, xanthan gum, carboxymethyl cellulose (CMC), and sodium salt of carboxymethyl cellulose (CMC-Na). The amount of the binder is preferably 1 to 20 wt% of the total weight of the tobacco sheet. The tobacco sheet may further contain other additives. Examples of the additives include a filler, such as pulp. In this specification, a plurality of tobacco sheets are used. The tobacco sheets may all have the same composition or physical properties. Alternatively, some or all of the tobacco sheets may have different compositions or physical properties.

[0107] The second tobacco filler may be manufactured by preparing a plurality of tobacco sheets having different widths, stacking the tobacco sheets so that the width thereof decreases from the bottom to the top to form a stack, and rolling the stack through a forming tube. According to this manufacturing method, the tobacco sheets extend in the longitudinal direction, and are concentrically arranged around the longitudinal axis. A fitting portion that extends in the longitudinal direction may be provided between the longitudinal axis and the innermost tobacco sheet.

[0108] According to this manufacturing method, the stack is preferably prepared so that the tobacco sheets that are adjacent to each other have non-contact regions therebetween after the rolling process.

[0109] When the non-contact regions (gaps), in which the tobacco sheets are not in contact with each other, are present between the tobacco sheets, flavor flow paths are provided so that flavor components can be efficiently delivered. Since heat from the heater can be transmitted to the outer tobacco sheets through portions of the tobacco sheets that are in contact with each other, heat can be efficiently transmitted.

[0110] The non-contact regions in which the tobacco sheets are not in contact with each other may be formed between the tobacco sheets by, for example, using embossed tobacco sheets, stacking the tobacco sheets without bonding the adjacent tobacco sheets over the entire area thereof, or stacking the tobacco sheets with the adjacent tobacco sheets being partially bonded to each other. Alternatively, the tobacco sheets may be stacked such that the adjacent tobacco sheets are weakly bonded over the entire or partial area thereof so that the tobacco sheets are separated from each other after the rolling process.

[0111] To prepare the tobacco rod part including the wrapping paper, the above-described wrapping paper may be provided at the bottom of the stack.

[0112] The fitting portion may be formed by placing a tubular dummy, such as a mandrel, at the top of the stack and removing the dummy after the second tobacco filler is formed.

[0113] The thickness of each tobacco sheet is not particularly limited. However, to achieve a good balance between the heat transmission efficiency and the strength, the thickness is preferably 200 to 600 μm. The tobacco sheets may have either the same thickness or different thicknesses.

[0114] The number of tobacco sheets that constitute the second tobacco filler is not particularly limited, and may be, for example, two, three, four, five, or six.

[0115] The third tobacco filler is composed of a single folded tobacco sheet. The sheet has a length similar to the

length of the tobacco rod part in the longitudinal direction. The sheet may be a so-called gather sheet that is folded multiple times along lines parallel to the longitudinal direction of the tobacco rod part. To achieve a good balance between the heat transmission efficiency and the strength, the thickness of the sheet is preferably 200 to 600 μm.

[0116] The base material of the sheet used as the third tobacco filler may be similar to that of the second tobacco filler.

[Wrapping Paper]

[0117] The structure of the wrapping paper is not particularly limited, and general wrapping paper may be used. For example, the base paper of the wrapping paper may be cellulose fiber paper, more specifically, hemp, wood, or a mixture thereof. The term "wrapping paper" referred to herein means paper for wrapping the tobacco filler.

[0118] The wrapping paper may contain a filler, and the type of the filler is not limited. The filler may be, for example, a metal carbonate such as calcium carbonate or magnesium carbonate, a metal oxide such as titanium oxide or aluminum oxide, a metal sulfate such as barium sulfate or calcium sulfate, a metal sulfide such as zinc sulfide, quartz, kaolin, talc, diatomite, or gypsum. In particular, to improve whiteness and opacity and increase the heating rate, calcium carbonate is preferably contained.

[0119] The content ratio of the filler in the wrapping paper is not particularly limited, and is typically 1 to 50 wt%, preferably 5 to 45 wt%, more preferably 10 to 42 wt%, and particularly preferably 20 to 40 wt%. The content of calcium carbonate, for example, can be determined by ash content measurement or by quantifying calcium ions after extraction.

[0120] When the content ratio is below the lower limits of the above-described ranges, the wrapping paper is easily burnt. When the content ratio is above the upper limits of the above-described ranges, the strength of the wrapping paper is greatly reduced, and the wrapping properties are degraded.

[0121] Various auxiliary agents other than the base paper and the filler may be added to the wrapping paper. For example, a water resistance improving agent may be added to improve the water resistance. The water resistance improving agent contains a wet paper strengthening agent (WS agent) and a sizing agent. Examples of the wet paper strengthening agent include urea formaldehyde resin, melamine formaldehyde resin, and polyamide epichlorohydrin (PAE). Examples of the sizing agent include rosin soap, alkyl ketene dimer (AKD), alkenyl succinic anhydride (ASA), and highly saponified polyvinyl alcohol having a saponification degree of 90% or more.

[0122] A paper strength enhancer may be added as an auxiliary agent. The paper strength enhancer may be, for example, polyacrylamide, cationic starch, oxidized starch, CMC, polyamide epichlorohydrin resin, or polyvinyl alcohol. In particular, it is known that a very small amount of oxidized starch serves to increase the air permeability (Japanese Unexamined Patent Application Publication No. 2017-218699).

[0123] The wrapping paper may be coated as appropriate.

[0124] A coating agent may be applied to at least one of the two surfaces, that is, the front and back surfaces, of the wrapping paper. Any coating agent may be used, but a coating agent capable of forming a film on a surface of the paper and reducing the liquid permeability is preferred. Examples of the coating agent include alginic acid and salts thereof (for example, sodium salts), polysaccharides such as pectin, cellulose derivatives such as ethyl cellulose, methyl cellulose, carboxymethyl cellulose, and nitrocellulose, and starch and derivatives thereof (for example, ether derivatives such as carboxymethyl starch, hydroxyalkyl starch, and cationic starch and ester derivatives such as starch acetate, starch phosphate, and starch octenyl succinate).

[0125] The basis weight of the wrapping paper is typically 20 to 45 g/m^2, and preferably 25 to 40 g/m^2. When the basis weight is in these ranges, appropriate strength and wrapping properties can be obtained.

[0126] The air permeability of the wrapping paper is typically 0 to 120 Coresta units, preferably 5 to 100 Coresta units, and more preferably 10 to 80 Coresta units. When the air permeability is in these ranges, appropriate strength and smoke taste can be obtained.

<1-4. Mouthpiece Part>

[0127] The structure of the heat-not-burn tobacco product 1 is not particularly limited, and may be a general structure. For example, referring to Fig. 3, a cooling portion 15, a filter portion 16, or a combination thereof may be provided.

[Cooling Portion]

[0128] The structure of the cooling portion is not particularly limited as long as the cooling portion has a function of cooling the mainstream tobacco smoke. For example, the cooling portion may be formed by rolling thick paper into a cylindrical form. In such a case, the cylindrical form has a hollow space therein, and vapor containing the aerosol-source material and tobacco flavor components comes into contact with air in the hollow space and is cooled.

[0129] As illustrated in Fig. 3, the heat-not-burn tobacco product 1 may have an opening (not illustrated) through which air is introduced from the outside in the cooling portion 15 and a portion of the tipping paper 12 that may be covered

with the lip release agent. The opening enables air to flow into the cooling portion 15 from the outside during use. Accordingly, vapor containing the aerosol-source material and tobacco flavor components generated when the tobacco rod part is heated comes into contact with the air from the outside, and is reduced in temperature and liquefied. Thus, generation of an aerosol can be accelerated. As illustrated in Fig. 4, when the cooling portion 15 has a plurality of openings 18, the openings 18 are arranged in the circumferential direction of the outer peripheral surface of the cooling portion 15. The number of the openings 18 arranged in the circumferential direction is not particularly limited, and may be two or more. Although the cooling portion illustrated in Fig. 4 has a cylindrical shape having a hollow space 17, the shape of the cooling portion is not limited to this. The boundary between the first region and the second region is not illustrated in Fig. 4.

[0130] The diameter of the openings is preferably 100 to 1,000 μm, and more preferably 300 to 800 μm. The openings are preferably substantially circular or substantially elliptical. When the openings are substantially elliptical, the diameter thereof is the length along the major axis.

[0131] As illustrated in Fig. 4, the openings in the cooling portion may be formed to extend through the tipping paper 12 and the lip release agent 13. The tipping paper 12 and the lip release agent 13 may have no openings, but preferably have openings to enhance the cooling effect.

[0132] The openings are arranged in the circumferential direction of the outer peripheral surface of the cooling portion. The number of sets of openings arranged in the circumferential direction (also referred to as "circumferential arrangement sets") is not particularly limited, and may be two or more.

[0133] The inner space of the cooling portion may be filled with a sheet-shaped material, such as paper, a polymer film, or metal foil, that is gathered. In such a case, the vapor may be cooled by using the specific heat of these materials.

[0134] The height of the cooling portion in the longitudinal direction is not particularly limited. To ensure a sufficient cooling function, the height is typically 5 to 40 mm, preferably 10 to 35 mm, and more preferably 15 to 30 mm.

[Filter Portion]

[0135] The structure of the filter portion 16 is not particularly limited as long as the filter portion 16 has a function of a general filter. For example, the filter portion 16 may be formed by processing cellulose acetate tow into a cylindrical form. The single fiber fineness and total fineness of the cellulose acetate tow are not particularly limited. However, when the filter portion has a circumference of 22 mm, the single fiber fineness is preferably 5 to 12 g per 9,000 m, and the total fineness is preferably 12,000 to 30,000 g per 9,000 m. The cross-sectional shape of the fibers of the cellulose acetate tow may be a Y cross section or an R cross section. When the filter is filled with the cellulose acetate tow, triacetin may be added in an amount of 5 to 10 wt% of the weight of the cellulose acetate tow to increase the hardness of the filter.

[0136] Although the filter portion 16 is composed of a single segment in Fig. 4, the filter portion 16 may instead be composed of a plurality of segments. When the filter portion 16 is composed of a plurality of segments, for example, a hollow segment having a center hole or the like may be disposed at an upstream side (tobacco rod side), and a segment disposed at a downstream side (side from which the user inhales) may be an acetate filter having a mouthpiece cross section filled with the cellulose acetate tow. Such a structure prevents unnecessary loss of the generated aerosol and improves the appearance of the heat-not-burn tobacco product. In consideration of a change in the sensation of inhalation and the feel of holding the heat-not-burn tobacco product in the mouth, the acetate filter may be disposed at the upstream side and the hollow segment having a center hole or the like may be disposed at the downstream side. A paper filter filled with sheet-shaped pulp paper may be provided instead of the acetate filter.

[0137] In the manufacture of the filter, adjustment of airflow resistance and addition of additives (for example, known absorbents, flavors, and flavor retainers) may be appropriately designed.

<2. Electrically Heated Tobacco Product>

[0138] An electrically heated tobacco product according to an embodiment includes an electric heating device and the above-described heat-not-burn tobacco product. The electric heating device includes a heater member, a battery unit that serves as a power source for the heater member, and a control unit for controlling the heater member. The heat-not-burn tobacco product is inserted into the electric heating device such that the heat-not-burn tobacco product comes into contact with the heater member.

[0139] The electrically heated tobacco product may be configured such that the outer peripheral surface of the heat-not-burn tobacco product is heated, as illustrated in Fig. 5, or such that an inner portion of the tobacco rod part of the heat-not-burn tobacco product is heated, as illustrated in Fig. 6. Although an electric heating device 2 illustrated in Figs. 5 and 6 has air introduction holes, the air introduction holes are not illustrated. An electrically heated tobacco product will be described with reference to Fig. 5.

[0140] To use an electrically heated tobacco product 3, the above-described heat-not-burn tobacco product 1 is inserted into the electric heating device 2 such that the heat-not-burn tobacco product 1 comes into contact with a heater member

23 disposed in the electric heating device 2.

[0141] The electric heating device 2 has a body 22 made of, for example, resin, and includes a battery unit 20 and a control unit 21 disposed in the body 22.

[0142] When the heat-not-burn tobacco product 1 is inserted into the electric heating device 2, the outer peripheral surface of the tobacco rod part comes into contact with the heater member 23 of the electric heating device 2. Then, the entirety of the outer peripheral surface of the tobacco rod part and a portion of the outer peripheral surface of the wrapped part come into contact with the heater member.

[0143] The heater member 23 of the electric heating device 2 generates heat under the control of the control unit 20. The generated heat is transmitted to the tobacco rod part of the heat-not-burn tobacco product. Accordingly, the aerosol-source material, the flavor components, and other components contained in the tobacco filler of the tobacco rod part are vaporized.

[0144] The heater member may be, for example, a sheet-shaped heater, a flat-plate-shaped heater, or a tubular heater. The sheet-shaped heater is a flexible heater having the shape of a sheet, and may be, for example, a heater including a film (with a thickness of about 20 to 225 μm) made of a heat-resistant polymer, such as polyimide. The flat-plate-shaped heater is a rigid heater having the shape of a flat plate (with a thickness of about 200 to 500 μm) and may be, for example, a heater having a resistance circuit provided on a flat plate substrate and serving as a heat emitting portion. The tubular heater is a heater having the shape of a hollow or solid tube, and may be, for example, a heater (with a thickness of about 200 to 500 μm) having a resistance circuit provided on an outer peripheral surface of a tube made of, for example, a metal and serving as a heat-generating portion. The heater member may instead be a rod-shaped heater or a cone-shaped heater made of, for example, a metal and having a resistance circuit disposed therein that serves as a heat-generating portion. The cross-sectional shape of the tubular heater may be, for example, a circular shape, an elliptical shape, a polygonal shape, or a rounded polygonal shape.

[0145] When the outer peripheral surface of the heat-not-burn tobacco product is heated as illustrated in Fig. 5, the sheet-shaped heater, the flat-plate-shaped heater, or the tubular heater described above may be used. When the tobacco rod part of the heat-not-burn tobacco product is heated from the inside as illustrated in Fig. 6, the flat-plate-shaped heater, the rod-shaped heater, or the cone-shaped heater described above may be used.

[0146] When the length of the tobacco rod part in the longitudinal direction is L mm, the length of the heater member in the longitudinal direction may be in the range of L ± 5.0 mm. To sufficiently transfer heat to the tobacco rod part and to sufficiently vaporize the aerosol-source material, the flavor components, and other components contained in the tobacco filler, that is, to ensure appropriate delivery of the aerosol, the length of the heater member in the longitudinal direction is preferably L mm or more. To reduce generation of components having an undesired influence on, for example, smoke taste, the length of the heater member in the longitudinal direction is preferably L+0.5 mm or less, L+1.0 mm or less, L+1.5 mm or less, L+2.0 mm or less, L+2.5 mm or less, L+3.0 mm or less, L+3.5 mm or less, L+4.0 mm or less, L+4.5 mm or less, or L+5.0 mm or less.

[0147] The heating intensity, such as the heating time and the heating temperature, at which the heat-not-burn tobacco product is heated by the heater member may be set in advance for each electrically heated tobacco product. For example, settings may be made in advance so that after the heat-not-burn tobacco product is inserted into the electric heating device, preliminary heating is performed for a certain time to increase the temperature of the outer peripheral surface of a portion of the heat-not-burn tobacco product that is inserted in the device to X (°C), and then the temperature is maintained at a constant temperature of X (°C) or less.

[0148] To deliver an appropriate amount of aerosol, the above-described temperature X (°C) is preferably 80°C or more and 400°C or less. More specifically, the temperature X (°C) may be 80°C, 90°C, 100°C, 110°C, 120°C, 130°C, 140°C, 150°C, 160°C, 170°C, 180°C, 190°C, 200°C, 210°C, 220°C, 230°C, 240°C, 250°C, 260°C, 270°C, 280°C, 290°C, 300°C, 310°C, 320°C, 330°C, 340°C, 350°C, 360°C, 370°C, 380°C, 390°C, or 400°C.

[0149] The temperature of the outer peripheral surface of the heat-not-burn tobacco product during heating of the heat-not-burn tobacco product by the electric heating device is measured by a method described below.

[0150] The vapor containing the aerosol-source material, the flavor components, and other components generated from the tobacco rod part when the tobacco rod part is heated by the heater member flows through the mouthpiece part including the cooling portion and the filter portion and reaches the user's mouth.

<3. Smoking Test>

[0151] A smoking test is performed with reference to the Canadian Intense Smoking (CIR) under the conditions described below.

[0152] For example, the above-described electrically heated tobacco product is used. After insertion of the tobacco rod part of the heat-not-burn tobacco product, the heater temperature is heated to 230°C within 17 seconds. Then, this temperature is maintained for 23 seconds, and then maintained constant at a temperature in the range of 170°C to 175°C. After that, the smoking test is carried out by performing automatic smoking using a single-port automatic smoking

machine manufactured by Borgwaldt KC Inc. at a flow rate of 55 cc per 2 seconds and smoking intervals of 30 seconds. The external air introduction holes formed in the outer periphery of the cooling portion are not covered during the smoking test. The mainstream tobacco smoke generated during the smoking test is collected by a Cambridge pad. After performing a puffing operation eight times, the Cambridge pad is removed.

<4. Method for Measuring Temperature of Outer Peripheral Surface of Heat-Not-Burn Tobacco Product>

[0153] The temperature of the outer peripheral surface of the heat-not-burn tobacco product during heating of the heat-not-burn tobacco product by the electric heating device is measured by the following method.

[0154] Before the heat-not-burn tobacco product is used, thermocouples (manufactured by Toa Electric Inc., Model TI-SP-K) are attached to the outer peripheral surface of the wrapped part of the heat-not-burn tobacco product to measure the temperatures at the following five positions: a position of an end adjacent to the inlet of the heater member of the electric heating device (hereinafter also referred to as "point b2"); a position at a distance of 5.0 mm from the end adjacent to the inlet of the heater member toward the mouthpiece-side end (hereinafter also referred to as "point b1"); a position at a distance of 7.5 mm from the end adjacent to the inlet of the heater member toward the mouthpiece-side end (hereinafter also referred to as "point a3"); a position at a distance of 13.5 mm from the end adjacent to the inlet of the heater member toward the mouthpiece-side end (hereinafter also referred to as "point a2"); and a position at a distance of 15.5 mm from the end adjacent to the inlet of the heater member toward the mouthpiece-side end (hereinafter also referred to as "point a1"). The thermocouples are attached by using pieces of polyimide tape (thickness 50 μm).

[0155] After the heat-not-burn tobacco product to which the thermocouples are attached is inserted into the electric heating device, the maximum temperature at each measurement point under the heater temperatures mentioned above in <3. Smoking Test> is recorded as the temperature of the outer peripheral surface of the heat-not-burn tobacco product.

<5. Method for measuring TSNA>

[0156] The method for measuring the amount of TSNA in the heat-not-burn tobacco product is not particularly limited. For example, the measurement may be performed by adding a measurement subject to an aqueous solution of 0.1 M (mol/L) ammonium acetate, performing stirring extraction (180 rpm, 60 min), and then filtering the extract with a glass fiber filter and subjecting the resulting filtrate to ion chromatography. The mobile phase may be an aqueous acetic acid solution and a methanol acetic acid solution.

[0157] The measurement subject may be prepared by cutting the heat-not-burn tobacco product into pieces in a direction perpendicular to the longitudinal direction. Either some or all of the pieces into which the heat-not-burn tobacco product is cut as described above may be used as the measurement subject.

<6. Method for Measuring Nitrate Nitrogen>

[0158] Nitrate nitrogen is a substance generated upon decomposition of nitrocellulose.

[0159] The method for measuring the amount of nitrate nitrogen in the heat-not-burn tobacco product is not particularly limited. For example, the measurement may be performed in accordance with ISO 15517:2003 under the following conditions.

· Analysis Device: Autoanalyzer (SYNCA 1H (manufactured by BL TEC K.K.))
· Preparation of Analysis Sample: A paper material to be analyzed is cut into pieces of any size, and distilled water is added thereto. Then, shaking extraction is performed for a certain time, and then filtering is performed. The resulting filtrate is used.
· Analysis Procedure:

(1) A standard solution of nitrate nitrogen and the analysis sample are set to the autoanalyzer, and distilled water is introduced through all tubes. The distilled water is introduced until air bubbles in the tubes are arranged at equal intervals.
(2) Bridge water is introduced through the reagent tube, and a chart baseline is checked.
(3) The liquid that flows through each tube is replaced with reagent. The reagent is introduced until the baseline is stabilized.
(4) After the baseline is stabilized, an analysis is started.
(5) After completion of the analysis, a calibration curve is created from the measurement value of the standard solution.
(6) The analysis sample is measured.
(7) A quantitative calculation is performed from the obtained calibration curve and the result of measurement

of the analysis sample.

[0160] The content ratio of nitrate nitrogen can be calculated from Equation (1) provided below.

$$\text{Content Ratio of Nitrate Nitrogen (\%)} = ((C \times V \times 100) \times 100)/m \times 1{,}000 \times 1{,}000 \quad (1)$$

C: Content of nitrate nitrogen determined from the calibration curve (mg/1)
V: Amount of solution (ml)
m: Sample weight (g)

[Examples]

[0161] The present invention will be further described by way of examples. However, the present invention is not limited to the description of the examples as long as the gist thereof is maintained.

<Example 1>

[Preparation of Tipping Paper for Wrapped Part]

[0162] A lip release agent (CHG LR varnish T produced by DIC Corporation) was prepared. Tipping paper manufactured by Nippon Paper Papylia Co., Ltd. (basis weight 37 g/mm^2, thickness 40 μm) was used. The size of the prepared tipping paper was such that the wrap circumference was 22 mm and the wrap length was 40 mm.

[0163] The above-described lip release agent was diluted with solvent (containing, for example, ethyl acetate). The resultant was applied to the above-described tipping paper by printing, and then dried to remove the solvent. This process was performed so that the lip release agent was uniformly applied and the content thereof per unit area was 0.56 μg/mm^2 in a region from the mouthpiece-side end of the heat-not-burn tobacco product to a position at a distance of 17 mm from the mouthpiece-side end in the longitudinal direction of the heat-not-burn tobacco product. The lip release agent was not applied in a region from the position at the distance of 17 mm to the tobacco rod-side end in the longitudinal direction of the wrapped part.

[Production of Tobacco Rod Part]

[0164] Shredded sheet tobacco with a flavor mixed at a ratio of 2 g per 100 g and an aerosol-source material (glycerol) mixed at a ratio of 40 g per 100 g was prepared as a tobacco filler. The tobacco filler was wrapped with wrapping paper (produced by Nippon Paper Papylia Co., Ltd., basis weight 35 g/m^2, thickness 52 μm) by using a high-speed wrapping machine.

[0165] The weight of the shredded tobacco was 0.8 g per piece, the wrap circumference was 22 mm, and the wrap length was 68 mm.

[0166] The wrapped tobacco rod parts were put into sealed plastic containers and stored in groups of 200 pieces for each level.

[Production of Heat-Not-Burn Tobacco Product]

[0167] The tobacco rod part produced by the above-described method was cut to a length of 20 mm After that, the tobacco rod part was manually wrapped with the prepared tipping paper together with a support portion and a filter portion to form the wrapped part. The support portion included a cooling portion, which was a paper tube with a length of 20 mm having diluting air holes formed in the outer periphery thereof, and a center hole filter with a length of 8 mm having a through hole. The filter portion had a length of 7 mm and was filled with cellulose acetate fibers. Thus, the heat-not-burn tobacco product was produced.

[0168] Thermocouples (manufactured by Toa Electric Inc., Model TI-SP-K) were attached to the wrapped part of the produced heat-not-burn tobacco product at five positions. The five positions were points a1, a2, a3, b1, and b2 described above in <4. Method for Measuring Temperature of Outer Peripheral Surface of Heat-Not-Burn Tobacco Product>. The thermocouples were attached by using polyimide tape (thickness 50 μm) cut into pieces having a size of 10 mm × 5 mm This is referred to as Example 1.

[0169] The diluting air holes correspond to the above-described openings, and are arranged in the circumferential direction at a position at a distance of 17 mm from the mouthpiece-side end of the heat-not-burn tobacco product in the longitudinal direction of the heat-not-burn tobacco product.

<Comparative Example 1>

[0170] A heat-not-burn tobacco product was produced similarly to Example 1 except that when the wrapped part was prepared as in Example 1, the lip release agent was uniformly applied to the tipping paper over the entire area thereof so that the content thereof per unit area was 0.56 $\mu g/mm^2$. In other words, the lip release agent was applied to satisfy the following condition: (the content of the lip release agent per unit area in the first region) = (the content of the lip release agent per unit area in the second region). This is referred to as Comparative Example 1.

<Smoking Test>

[0171] Each of the heat-not-burn tobacco products according to Example 1 and Comparative Example 1 was subjected to a smoking test. The electrically heated tobacco product subjected to the smoking test had the same structure as that described above. After insertion of the tobacco rod part of the heat-not-burn tobacco product, the heater temperature was heated to 230°C within 17 seconds. Then, this temperature was maintained for 23 seconds, and then maintained constant at a temperature in the range of 170°C to 175°C. After that, the smoking test was carried out by performing automatic smoking using a single-port automatic smoking machine manufactured by Borgwaldt KC Inc. at a flow rate of 55 cc per 2 seconds and smoking intervals of 30 seconds. The external air introduction holes formed in the outer periphery of the cooling portion were not covered during the smoking test. The mainstream tobacco smoke generated during the smoking test was collected by a Cambridge pad. After performing a puffing operation eight times, the Cambridge pad was removed.

[0172] During the smoking test, thermocouples attached to the wrapped part of each heat-not-burn tobacco product at the above-described five points (points a1, a2, a3, b1, and b2) were used to measure the maximum temperature at each point on the outer peripheral surface of the wrapped part of the heat-not-burn tobacco product. The results are shown in Table 1.

<Measurement of TSNA>

[0173] The amount of TSNA contained in the heat-not-burn tobacco product after the smoking test was measured by the following method.

[0174] After the smoking test, the heat-not-burn tobacco product was divided into the following four regions (A) to (D).

(A) A region from the mouthpiece-side end to a position at a distance of 27.5 mm from the mouthpiece-side end toward the tobacco rod in the longitudinal direction of the heat-not-burn tobacco product (region including points a1, a2, and a3 in the above-described temperature measurement).

(B) A region from the position at the distance of 27.5 mm in (A) to a position at a distance of 7.5 mm from the position at the distance of 27.5 mm toward the tobacco rod in the longitudinal direction of the heat-not-burn tobacco product (region including points b1 and b2 in the above-described temperature measurement).

(C) A region from the position at the distance of 7.5 mm in (B) to a position at a distance of 5 mm from the position at the distance of 7.5 mm toward an end of the tobacco rod in the longitudinal direction of the heat-not-burn tobacco product (region in which the tipping paper is present and that extends to the tobacco rod-side end in Example 1 and Comparative Example 1).

(D) A region from the position at the distance of 5 mm in (C) to the end of the tobacco rod in the longitudinal direction of the heat-not-burn tobacco product (region in which the tipping paper is not present in Example 1 and Comparative Example 1).

[0175] Among the above-described four regions (A) to (D) of the heat-not-burn tobacco product, the regions (A) to (C), which are regions of the wrapped part, were used as measurement subjects. The amount of TSNA in each measurement subject was measured by adding the measurement subject to an aqueous solution of 0.1 M (mol/L) ammonium acetate, performing stirring extraction (180 rpm, 60 min), and then filtering the extract with a glass fiber filter and subjecting the resulting filtrate to ion chromatography. The mobile phase was an aqueous acetic acid solution and a methanol acetic acid solution. Table 1 shows the content of TSNA in each of the measurement subjects of Example 1 and Comparative Example 1.

[Measurement of Nitrate Nitrogen]

[0176] The amount of nitrate nitrogen in the heat-not-burn tobacco product was measured in accordance with ISO 15517:2003 under the following conditions.

· Analysis Device: Autoanalyzer (SYNCA 1H (manufactured by BL TEC K.K.))
· Preparation of Analysis Sample: Similarly to the above-described measurement of TSANA, after the smoking test, the heat-not tobacco product was divided into the four regions (A) to (D) and cut into pieces of any size, and 5 ml of distilled water was added thereto. Then, shaking extraction was performed for 15 minutes, and then filtering was performed. The resulting filtrate was used.
· Analysis Procedure:

(1) A standard solution of nitrate nitrogen and the analysis sample are set to the autoanalyzer, and distilled water is introduced through all tubes. The distilled water is introduced until air bubbles in the tubes are arranged at equal intervals.
(2) Bridge water is introduced through the reagent tube, and a chart baseline is checked.
(3) The liquid that flows through each tube is replaced with reagent. The reagent is introduced until the baseline is stabilized.
(4) After the baseline is stabilized, analysis is started.
(5) After completion of the analysis, a calibration curve is created from the measurement value of the standard solution.
(6) The analysis sample is measured.
(7) A quantitative calculation is performed from the obtained calibration curve and the result of measurement of the analysis sample.

[0177] The content ratio of nitrate nitrogen can be calculated from Equation (1) provided below.

$$\text{Content Ratio of Nitrate Nitrogen (\%)} = ((C \times V \times 100) \times 100)/m \times 1{,}000 \times 1{,}000 \quad (1)$$

C: Content of nitrate nitrogen determined from the calibration curve (mg/l)
V: Amount of solution (ml)
m: Sample weight (g)

[Sizing Degree]

[0178] The sizing degree was measured under the following conditions:

Measurement Device: Surface & Sizing Tester Model EST 12 (manufactured by Nihon Rufuto Co., Ltd.)

Sample (Test Paper): Paper placed in an environment at a temperature of 23°C and a humidity of 50 RH% for 24 hours and then cut into the size of 20 mm × 70 mm.

Measurement Method: The test paper was immersed in test liquid (water) that filled the measurement cell of the above-described measurement device. From that time, low-energy ultrasonic waves were emitted in a thickness direction. In this specification, assuming that a measurement start time is the time when the test paper is completely immersed in the test liquid, the sizing degree is the time from the measurement start time to the time when a permeability peak that is obtained is at a maximum value (MAX value).

[0179] In Example 1, the above-described measurement was performed on the second region of the wrapped part of the heat-not tobacco product before the smoking test. The sizing degree was 0.476 seconds (average value of multiple measurements). Similarly, in Comparative Example 1, the above-described measurement was performed on the second region of the wrapped part. The sizing degree was 0.082 seconds (average value of multiple measurements).

[Contact Angle]

[0180] The contact angle was measured under the following conditions:

Measurement Device: Contact Angle Meter Model DMC-MC3 (manufactured by Kyowa Electronic Instruments Co., Ltd.)

Sample (Test Paper): Paper placed in an environment at a temperature of 23°C and a humidity of 50 RH% for 24 hours and then cut into the size of 20 mm × 70 mm.

Measurement Method: The test paper was attached to a slide glass with double-sided tape, and contact angle was measured by using the θ/2 method as the contact angle evaluation method with an amount of liquid (water) droplet of 7 μL and a measurement start time of 1,000 ms.

[0181] In Example 1, the above-described measurement was performed on the second region of the wrapped part of the heat-not tobacco product before the smoking test. The contact angle was 101.6° (average value of multiple measurements). Similarly, in Comparative Example 1, the above-described measurement was performed on the second region of the wrapped part. The contact angle was 94.0° (average value of multiple measurements).

[Table 1]

[0182]

Table 1

Region		A			B		c
Temperature Measurement Position		a1	a2	a3	b1	b2	-
Maximum Temperature (°C)		41	72	75	120	230	230*
Comparative Example 1	Nitrate Nitrogen (%)	0.0021			0.0047		0.028
	TSNA (ng)	253			259		598
Example 1	Nitrate Nitrogen (%)	0.0008			0.0008		0.008
	TSNA (ng)	88			34		238
* The maximum temperature of the outer peripheral surface of the wrapped part of the heat-not-burn tobacco product in region C during use is an estimated value.							

[0183] Table 1 shows that in all of the regions (A) to (C), the amount of TSNA and the percentage of nitrate nitrogen are less in Example 1 than in Comparative Example 1.

Reference Signs List

[0184]

1 heat-not-burn tobacco product
10 tobacco rod part
11 mouthpiece part
12a tipping paper (first region)
12b tipping paper (second region)
12 tipping paper
13a lip release agent (first region)
13b lip release agent (second region)
13 lip release agent
14 line showing boundary between first region and second region
15 cooling portion
16 filter portion
17 hollow space
18 opening
2 electric heating device
20 battery unit
21 control unit
22 body

23 heater member
3 electrically heated tobacco product

Claims

1. A heat-not-burn tobacco product comprising a tobacco rod part, a mouthpiece part, and a wrapped part in which the tobacco rod part and the mouthpiece part are wrapped with tipping paper,

   wherein a lip release agent is applied to at least a portion of the tipping paper,
   wherein the wrapped part consists of a first region including a mouthpiece-side end of the heat-not-burn tobacco product and a second region positioned on a tobacco rod part side of the first region in the wrapped part,
   wherein the first region is a region in which a temperature is less than 230°C during use of the heat-not-burn tobacco product, and
   wherein the first region and the second region satisfy a following condition (A):

   (A) (a content of the lip release agent per unit area in the first region) > (a content of the lip release agent per unit area in the second region).

2. The heat-not-burn tobacco product according to Claim 1, wherein the first region is a region in which a temperature is less than 120°C during use of the heat-not-burn tobacco product.

3. The heat-not-burn tobacco product according to Claim 1, wherein the first region is a region in which a temperature is less than 100°C during use of the heat-not-burn tobacco product.

4. The heat-not-burn tobacco product according to Claim 1, wherein the first region is a region in which a temperature is less than 80°C during use of the heat-not-burn tobacco product.

5. The heat-not-burn tobacco product according to any one of Claims 1 to 4, wherein a boundary between the first region and the second region is on a mouthpiece side of a mouthpiece-side end of a heater member that heats the heat-not-burn tobacco product during use of the heat-not-burn tobacco product.

6. The heat-not-burn tobacco product according to any one of Claims 1 to 5, wherein the mouthpiece part comprises a cooling portion and a filter portion.

7. The heat-not-burn tobacco product according to any one of Claims 1 to 6, wherein a ratio of the content of the lip release agent per unit area in the second region to the content of the lip release agent per unit area in the first region is 1/2 or less.

8. The heat-not-burn tobacco product according to Claim 7, wherein the ratio of the content of the lip release agent per unit area in the second region to the content of the lip release agent per unit area in the first region is 1/4 or less.

9. The heat-not-burn tobacco product according to any one of Claims 1 to 8, wherein the content of the lip release agent per unit area in the second region is less than 0.56 $\mu g/mm^2$.

10. The heat-not-burn tobacco product according to any one of Claims 1 to 9, wherein the lip release agent contains at least nitrocellulose or ethyl cellulose.

11. An electrically heated tobacco product comprising an electric heating device and the heat-not-burn tobacco product according to any one of Claims 1 to 10, the electric heating device comprising a heater member, a battery unit that serves as a power source for the heater member, and a control unit for controlling the heater member, and the heat-not-burn tobacco product being inserted into the electric heating device such that the heat-not-burn tobacco product comes into contact with the heater member.

FIG. 1

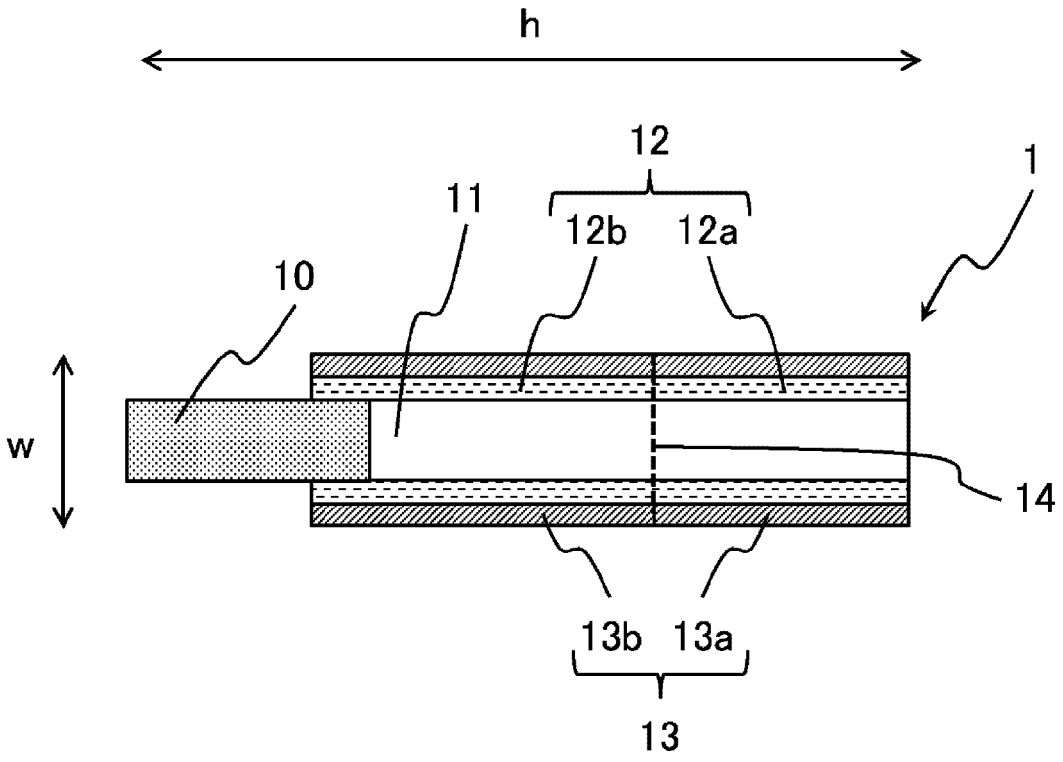

FIG. 2

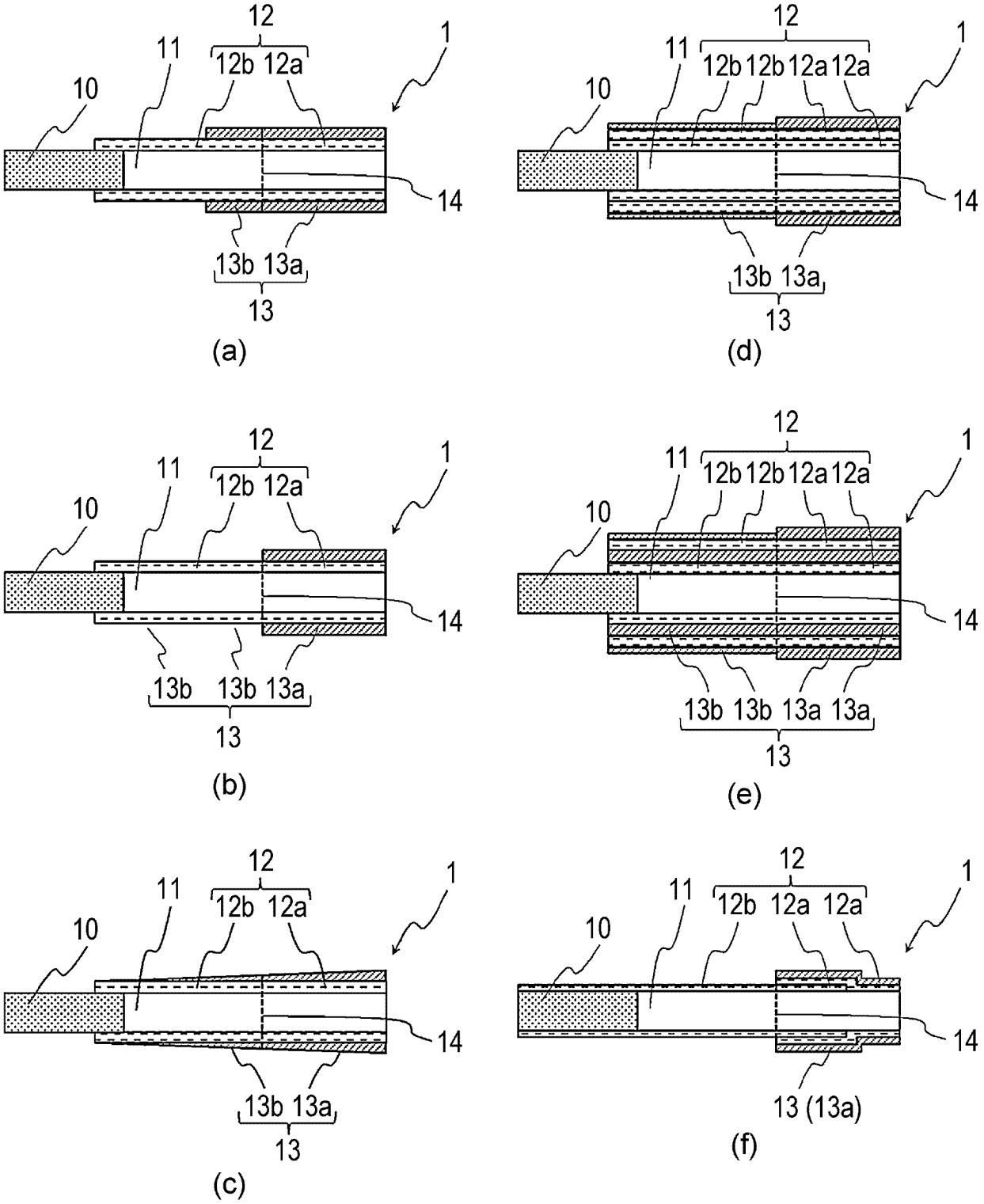
12
11
12b 12a
1
10
14
13b 13a
13
(a)
12
11
12b 12b 12a 12a
1
10
14
13b 13a
13
(d)
12
11
12b 12a
1
10
14
13b 13b 13a
13
(b)
12
11
12b 12b 12a 12a
1
10
14
13b 13b 13a 13a
13
(e)
12
11
12b 12a
1
10
14
13b 13a
13
(c)
12
11
12b 12a 12a
1
10
14
13 (13a)
(f)

FIG. 3

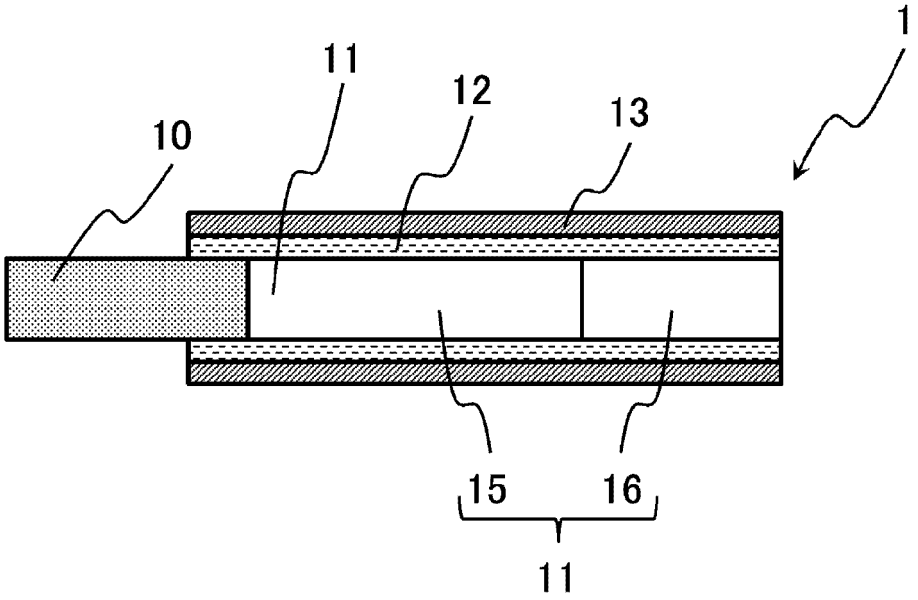

FIG. 4

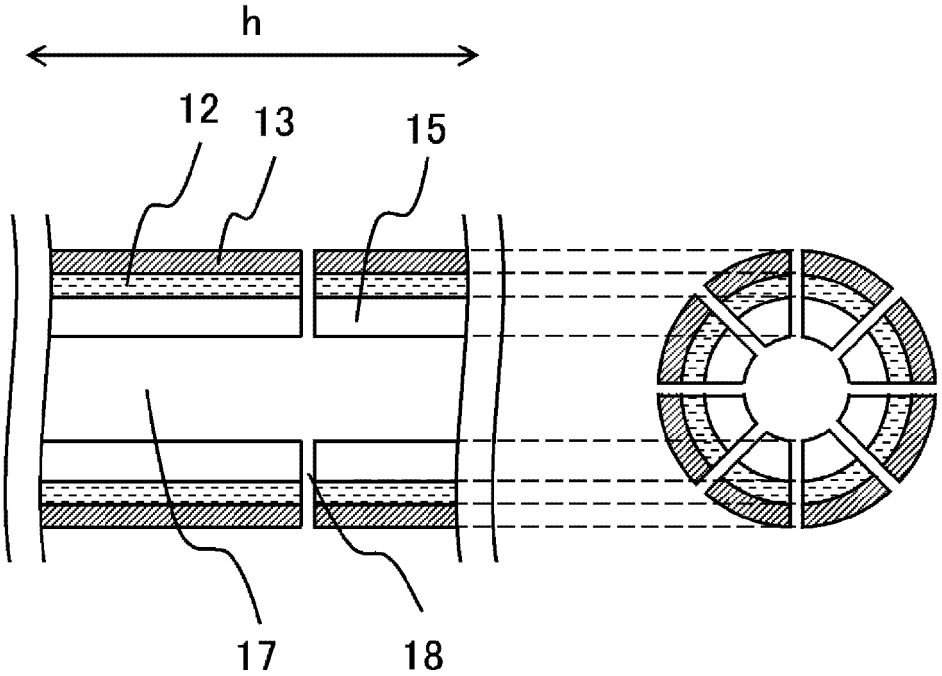

FIG. 5

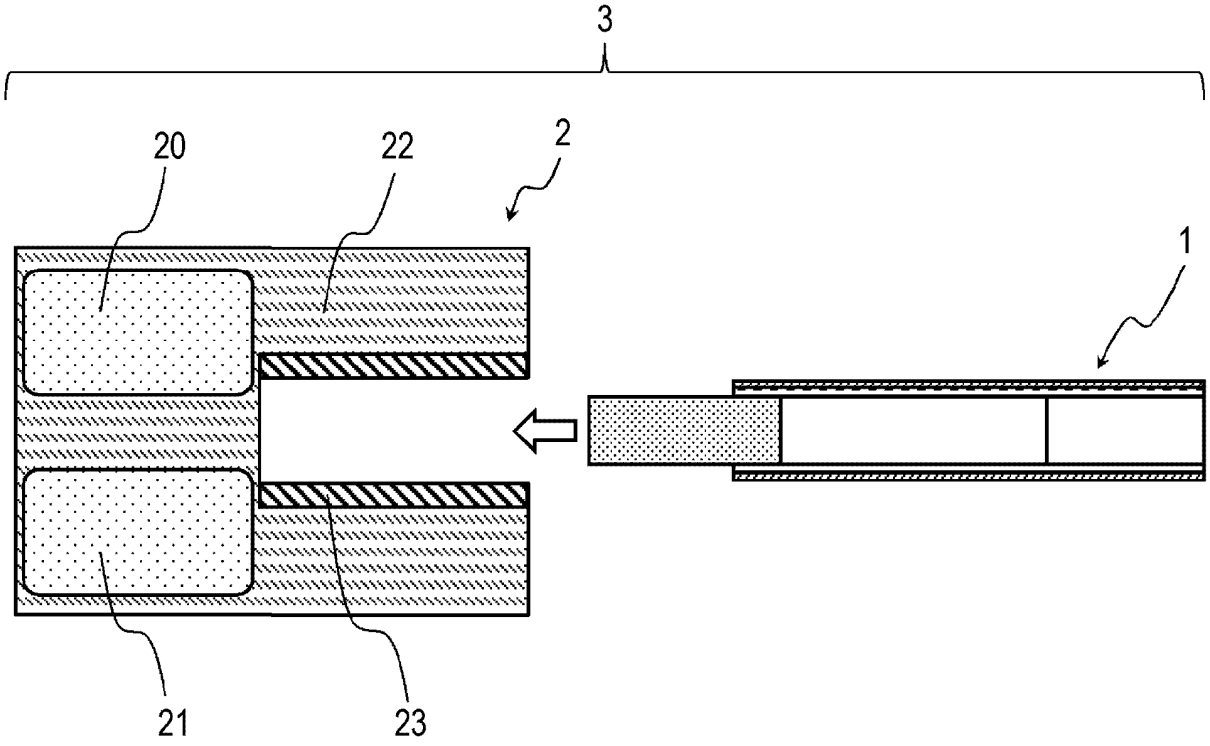

FIG. 6

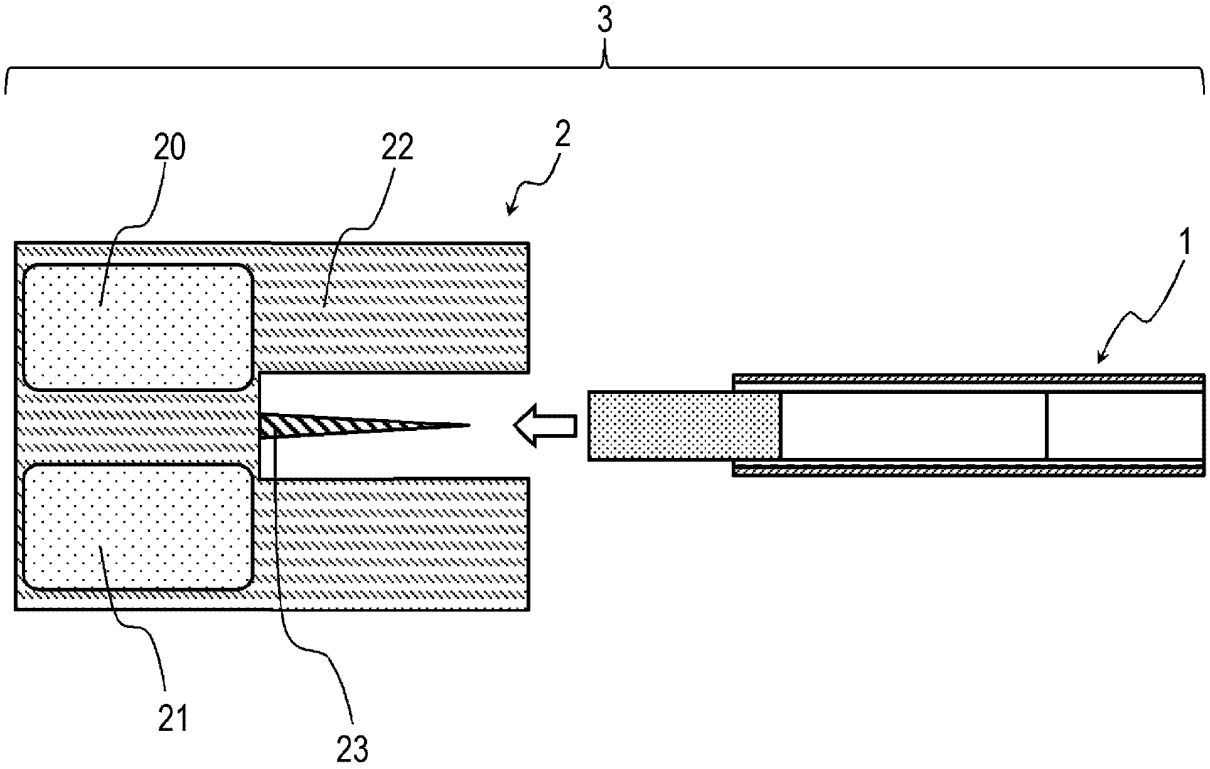

INTERNATIONAL SEARCH REPORT

International application No.
PCT/JP2020/025454

A. CLASSIFICATION OF SUBJECT MATTER
A24D 1/02(2006.01)i; A24D 1/20(2020.01)i; A24F 40/20(2020.01)i
FI: A24F40/20; A24D1/02; A24D1/20

According to International Patent Classification (IPC) or to both national classification and IPC

B. FIELDS SEARCHED

Minimum documentation searched (classification system followed by classification symbols)
A24D1/02; A24D1/20; A24F40/20

Documentation searched other than minimum documentation to the extent that such documents are included in the fields searched

Published examined utility model applications of Japan	1922-1996
Published unexamined utility model applications of Japan	1971-2020
Registered utility model specifications of Japan	1996-2020
Published registered utility model applications of Japan	1994-2020

Electronic data base consulted during the international search (name of data base and, where practicable, search terms used)

C. DOCUMENTS CONSIDERED TO BE RELEVANT

Category*	Citation of document, with indication, where appropriate, of the relevant passages	Relevant to claim No.
A	JP 2010-506594 A (R.J. REYNOLDS TOBACCO COMPANY) 04.03.2010 (2010-03-04) paragraph [0052]	1-11
A	WO 2011/114530 A1 (JAPAN TOBACCO INC.) 22.09.2011 (2011-09-22) paragraphs [0039], [0044]-[0045]	1-11
A	JP 2009-545324 A (R.J. REYNOLDS TOBACCO COMPANY) 24.12.2009 (2009-12-24) paragraph [0041]	1-11
A	US 5595196 A (ENSO-GUTZEIT OY) 21.01.1997 (1997-01-21) entire text, all drawings	1-11

☐ Further documents are listed in the continuation of Box C. ☒ See patent family annex.

* Special categories of cited documents:
"A" document defining the general state of the art which is not considered to be of particular relevance
"E" earlier application or patent but published on or after the international filing date
"L" document which may throw doubts on priority claim(s) or which is cited to establish the publication date of another citation or other special reason (as specified)
"O" document referring to an oral disclosure, use, exhibition or other means
"P" document published prior to the international filing date but later than the priority date claimed
"T" later document published after the international filing date or priority date and not in conflict with the application but cited to understand the principle or theory underlying the invention
"X" document of particular relevance; the claimed invention cannot be considered novel or cannot be considered to involve an inventive step when the document is taken alone
"Y" document of particular relevance; the claimed invention cannot be considered to involve an inventive step when the document is combined with one or more other such documents, such combination being obvious to a person skilled in the art
"&" document member of the same patent family

Date of the actual completion of the international search	Date of mailing of the international search report
13 August 2020 (13.08.2020)	08 September 2020 (08.09.2020)
Name and mailing address of the ISA/ Japan Patent Office 3-4-3, Kasumigaseki, Chiyoda-ku, Tokyo 100-8915, Japan	Authorized officer Telephone No.

Form PCT/ISA/210 (second sheet) (January 2015)

INTERNATIONAL SEARCH REPORT
Information on patent family members

International application No.
PCT/JP2020/025454

Patent Documents referred in the Report	Publication Date	Patent Family	Publication Date
JP 2010-506594 A	04 Mar. 2010	US 2008/0092912 A1 paragraph [0074] WO 2008/108889 A1 EP 2083643 A1 CN 101557728 A	
WO 2011/114530 A1	22 Sep. 2011	(Family: none)	
JP 2009-545324 A	24 Dec. 2009	US 2008/0029111 A1 paragraph [0046] WO 2008/019281 A2 EP 2046153 A2	
US 5595196 A	21 Jan. 1997	(Family: none)	

Form PCT/ISA/210 (patent family annex) (January 2015)

REFERENCES CITED IN THE DESCRIPTION

This list of references cited by the applicant is for the reader's convenience only. It does not form part of the European patent document. Even though great care has been taken in compiling the references, errors or omissions cannot be excluded and the EPO disclaims all liability in this regard.

Patent documents cited in the description

- JP 2018191652 A **[0005]**
- JP 2004510422 W **[0102]**
- WO 2014104078 A **[0104]**
- JP 2017218699 A **[0122]**

Non-patent literature cited in the description

- Tobacco Encyclopedia. Tobacco Academic Studies Center, 31 March 2009 **[0088]**