(19) Europäisches Patentamt
European Patent Office
Office européen des brevets

(11) EP 4 403 244 A8

(12) **CORRECTED EUROPEAN PATENT APPLICATION**
published in accordance with Art. 153(4) EPC

(15) Correction information:
Corrected version no 1 (W1 A1)
Corrections, see
Bibliography INID code(s) 72

(48) Corrigendum issued on:
28.08.2024 Bulletin 2024/35

(43) Date of publication:
24.07.2024 Bulletin 2024/30

(21) Application number: **22869928.6**

(22) Date of filing: **12.09.2022**

(51) International Patent Classification (IPC):
B01D 53/06 *(2006.01)* ***B01D 53/26*** *(2006.01)*
F24F 6/08 *(2006.01)* ***F24F 3/14*** *(2006.01)*
B01J 20/26 *(2006.01)* ***B01J 20/34*** *(2006.01)*

(52) Cooperative Patent Classification (CPC):
F24F 3/14; B01D 53/02; B01D 53/0438; B01D 53/06; B01D 53/26; B01D 53/261; B01D 53/28; B01J 20/226; B01J 20/26; B01J 20/28023; B01J 20/34; B01J 20/3483; F24F 3/147; F24F 6/08

(86) International application number:
PCT/JP2022/034028

(87) International publication number:
WO 2023/042781 (23.03.2023 Gazette 2023/12)

(84) Designated Contracting States:
AL AT BE BG CH CY CZ DE DK EE ES FI FR GB GR HR HU IE IS IT LI LT LU LV MC MK MT NL NO PL PT RO RS SE SI SK SM TR
Designated Extension States:
BA ME
Designated Validation States:
KH MA MD TN

(30) Priority: **17.09.2021 JP 2021152259**

(71) Applicant: **DAIKIN INDUSTRIES, LTD.**
Osaka-Shi, Osaka 530-0001 (JP)

(72) Inventors:
- **KIZAWA, Toshihiro**
Osaka-shi, Osaka 530-0001 (JP)
- **OKUZAWA, Kento**
Osaka-shi, Osaka 530-0001 (JP)

(74) Representative: **Hoffmann Eitle**
Patent- und Rechtsanwälte PartmbB
Arabellastraße 30
81925 München (DE)

(54) **HUMIDITY CONTROL DEVICE OR ATMOSPHERIC WATER GENERATOR**

(57) Provided is a humidity control apparatus or an atmospheric water generator that prevents an adsorbent that adsorbs moisture from being damaged by heating during regeneration of the adsorbent. A humidity control apparatus (100) includes a moisture absorbing material (11a) and a heater (12). The moisture absorbing material (11a) adsorbs moisture. The heater (12) heats the moisture absorbing material (11a) to desorb the moisture adsorbed by the moisture absorbing material (11a) from the moisture absorbing material (11a). The moisture absorbing material (11a) has a substrate and a metal-organic framework. The metal-organic framework includes a metal ion and an organic ligand. The substrate has a heat-resistant temperature of 150°C or higher.

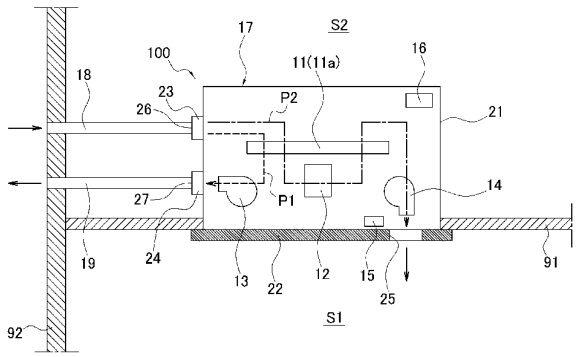

FIG. 1

EP 4 403 244 A8