(19) Europäisches Patentamt
European Patent Office
Office européen des brevets

(11) EP 4 474 488 A1

(12) EUROPEAN PATENT APPLICATION

(43) Date of publication:
11.12.2024 Bulletin 2024/50

(21) Application number: **24180115.8**

(22) Date of filing: **05.06.2024**

(51) International Patent Classification (IPC):
C21D 1/02 *(2006.01)* ***C21D 1/18*** *(2006.01)*
C21D 1/42 *(2006.01)* ***C21D 8/06*** *(2006.01)*
C21D 9/52 *(2006.01)*

(52) Cooperative Patent Classification (CPC):
C21D 8/06; C21D 1/02; C21D 1/18; C21D 1/42; C21D 9/525; C21D 1/62; C22F 1/04; C22F 1/08

(84) Designated Contracting States:
AL AT BE BG CH CY CZ DE DK EE ES FI FR GB GR HR HU IE IS IT LI LT LU LV MC ME MK MT NL NO PL PT RO RS SE SI SK SM TR
Designated Extension States:
BA
Designated Validation States:
GE KH MA MD TN

(30) Priority: **09.06.2023 IT 202300011799**

(71) Applicant: **Semplice S.p.A.**
20123 Milano (IT)

(72) Inventor: **BRUMANA, Marioantonio**
20008 BAREGGIO MI (IT)

(74) Representative: **Modiano, Micaela Nadia et al**
Modiano & Partners
Via Meravigli, 16
20123 Milano (IT)

(54) LINE AND METHOD FOR TREATING METAL WIRES AND/OR STRANDS

(57) A line (1a, 1b, 1c, 1d, 1e) for treating metal wires and/or strands, hereinafter generically referred to as product(s), which comprises:
- means for pulling and braking a product (2) for its movement along the line (1a, 1b, 1c, 1d, 1e) according to an advancement speed (V_{line}) and an advancement pulling force (P_{act}) that can be set by means of a control and management unit for the line (1a, 1b, 1c, 1d, 1e);
- an induction furnace (3) operating at a treatment temperature (T_t) that can be set by means of the control and management unit and is passed through by the product (2) in order to heat it;
- a cooling tank (4) placed downstream of the induction furnace (3) for the controlled cooling of the product (2) substantially to a preset temperature; and
- a first control pyrometer (5) placed between the induction furnace (3) and the cooling tank (4) and adapted to measure a first temperature (T_{P1}) of the product (2) in output from the induction furnace (3); the first control pyrometer (5) is placed at a first distance (d_{p1}) from the outlet of the induction furnace (3) in order to measure the first temperature (T_{p1}), and at least one second control pyrometer (6) is placed between the first control pyrometer (5) and the cooling tank (4) at a predefined second distance (d_{p2}) from the outlet of the induction furnace (3) in order to measure a second temperature (T_{p2}) of the product (2) in input to the cooling tank (4); the control and management unit of the line (1a, 1b, 1c, 1d, 1e) is configured to vary the power of the induction furnace (3) with the speed (V_{line}) of the product (2) and the pulling force (P_{act}) of the means for pulling and braking, which are set as a function of:
- the first temperature (T_{p1}), which varies as a function of the line speed (V_{line}) of the product, assuming that the second temperature (T_{p2}) is kept constant and substantially equal to the desired treatment temperature (Tt);
- the diameter (d_w) of the product (2);
- the advancement speed (V_{line}) of the line (1a, 1b, 1c, 1d, 1e);
- the distances ($_{d}$p1, $_{d}$p2) of the control pyrometers (5, 6); and
- the elongation percentage (ε) of the product (2), calculated as the difference between the rotation rate of the means for pulling and braking.

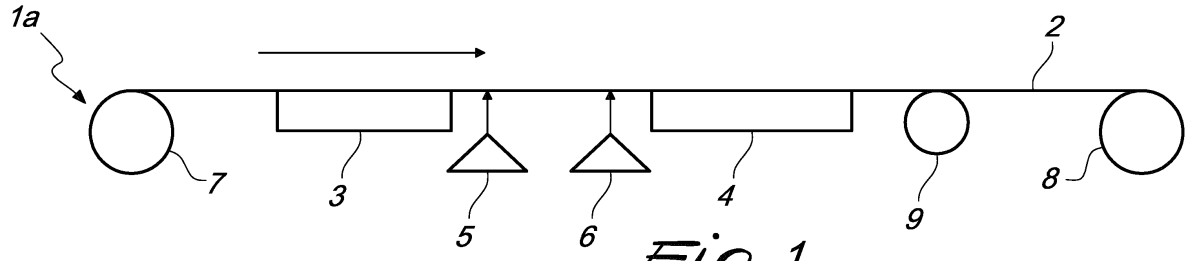

Fig. 1

EP 4 474 488 A1

Description

[0001] The present invention relates to a line for treating metal wires and/or strands and an associated method that can be obtained with such line.

[0002] Lines for treating metal wires and/or strands, hereinafter generally referred to as product(s), are used to obtain "low relaxation" products, which are used in the construction sector.

[0003] These lines are divided mainly into two types: in the first line the product is a strand, i.e. a group of stranded wires, and in the second line the product is constituted by a single wire.

[0004] The end characteristics of the product are obtained by means of a thermomechanical treatment, which aims to keep the deformation percentage, the pulling force, and the temperature all constant during the treatment.

[0005] More specifically, the thermomechanical treatment entails heating by means of an induction furnace, the operating temperature of which is comprised indicatively, but non compulsorily, in a range between 330 and 420°C, with subsequent cooling in a tank.

[0006] Since the heating process is performed on a material that is circular in cross-section - of variable dimension and at different operating speeds - and since the treatment temperature needs to be constant for every type of product treated and for every production speed, as a function of the diameter and of the temperature difference, the material therefore needs a certain amount of time to homogenize the temperature through the full cross-section.

[0007] Typically, if the production speed is increased, this time increases, and it follows from this that the product, traveling at constant speed, will pass through a space that is consequently greater before the temperature becomes uniform throughout the cross-section and, if the production speed of the system is increased, then the space necessary in order to achieve complete diffusion increases.

[0008] The thermal power that is applied to the material is proportional to the mass flow produced by the line.

[0009] In particular, it is governed by the equation:

$$Q = C_p \, m \, \Delta T$$

where *"m"* varies proportionally with the speed of the line and with the difference in temperature between the temperature measured by a pyrometer in output from the induction furnace and the temperature in input to the cooling tank.

[0010] As a consequence, by increasing the line speed and keeping a constant diffusion temperature, the thermal power of the furnace will increase linearly with the speed.

[0011] Currently, the temperature of the furnace is managed through two types of control logic: in the first, temperature is regulated while the elongation is kept constant, and in the second, it is regulated while the pulling force is kept constant.

[0012] The regulation control logic with constant elongation is typically applied in lines for treating wire.

[0013] Here, the pyrometer in output from the furnace reads the surface temperature of the material, in order to regulate the power of the furnace and the objective is to keep the temperature constant for every production speed.

[0014] In parallel, the elongation percentage is read indirectly from the difference in the rotation speed of the two capstans that pull and brake the product, and this percentage is used to keep constant the difference in speed between the two capstans, with the applied pulling force not being regulated and instead being a consequence of temperature and speed.

[0015] The drawback of this control logic consists in that there is an increase in the pulling force required by the line as the speed of the line increases, and consequently the characteristics of the final product are non-constant.

[0016] In fact, as the speed varies, the temperature read by the pyrometer is kept constant and, as the speed increases, the difference between the temperature read by the pyrometer (which is superficial) and the diffusion temperature increases.

[0017] The consequence is a furnace power level that does not vary linearly with speed, with a consequent reduction of the effective diffusion temperature and an increase in the strength of the material.

[0018] The increase in strength entails a decrease in elongation which, in order to be kept constant, requires an increase in the pulling force imposed between the two capstans.

[0019] Differently, the regulation control logic with constant pulling force is used in wire treatment lines up to a certain product diameter, or in lines for treating strands.

[0020] Here, the pyrometer in output from the furnace reads the surface temperature of the material, which is used to regulate the power of the furnace in order to keep the temperature constant for every production speed for the same diameter.

[0021] In parallel, the elongation percentage is not, in this case, one of the parameters used for feedback and the pulling force is read by a load cell, placed along the line, and feedback-controlled so as to keep it constant.

[0022] The drawback of this control logic consists in that there is a reduction in the elongation percentage as the speed increases, and consequently the characteristics of the final product are non-constant.

[0023] In this case too, therefore, as it is not heated properly, the material has a greater strength and, for the same pulling force applied, it exhibits a lower elongation percentage.

[0024] To sum up, as the line speed and the diameter of the product increase, the time necessary for the diffusion of the temperature is longer than the time necessary

for the material to reach the pyrometer.

[0025] As a consequence, the difference between the temperature read by the pyrometer and the diffusion temperature of the material increases, and the material has a higher resistance to deformation, and therefore:

- for a line controlled by elongation, an increase in pulling force is required as the line speed increases; and
- for a line controlled by pulling force, a reduction in the elongation percentage read from the capstans will be observed as the speed of the line increases.

[0026] In both cases, the characteristics of the final product are non-replicable and non-constant for all production speeds.

[0027] The aim of the present invention consists in providing a line for treating metal wires and/or strands that is capable of overcoming the above-mentioned drawbacks.

[0028] Within this aim, an object of the present invention is to provide a method for treating metal wires and/or strands that is capable of overcoming the above-mentioned drawbacks.

[0029] This aim and this and other objects which will become better evident hereinafter are achieved by a line for treating metal wires and/or strands that comprises:

- means for pulling and braking a product for its movement along said line according to an advancement speed and an advancement pulling force that can be set by means of a control and management unit for said line;
- an induction furnace operating at a treatment temperature that can be set by means of said control and management unit and is passed through by said product in order to heat it;
- a cooling tank placed downstream of said induction furnace for the controlled cooling of said product substantially to a preset temperature; and
- a first control pyrometer placed between said induction furnace and said cooling tank and adapted to measure a first temperature of said product in output from said induction furnace;

characterized in that said first control pyrometer is placed at a first distance from the outlet of said induction furnace in order to measure said first temperature and characterized in that it comprises at least one second control pyrometer arranged between said first control pyrometer and said cooling tank at a second distance from the outlet of said induction furnace which is predefined for measuring a second temperature of said product in input to said cooling tank; said control and management unit of said line being configured to vary the power of said induction furnace with said speed of said product and said pulling force of said means for pulling and braking, which are set as a function of:

- said first temperature, which varies as a function of said line speed of the product, assuming that said second temperature is kept constant and substantially equal to said desired treatment temperature;
- the diameter of said product;
- said advancement speed of said line;
- said distances of said control pyrometers; and
- the elongation percentage of said product, calculated as the difference between the rotation rate of said means for pulling and braking.

[0030] Moreover, this aim and this and other objects which will become better evident hereinafter are achieved by a method for treating metal wires and/or strands obtainable by means of a line, which comprises the following steps:

- providing a product to be treated;
- advancing said product on said line by virtue of means for pulling and braking according to an advancement speed and an advancement pulling force that can be set by means of a control and management unit for said line;
- heating said product by means of an induction furnace placed on said line and operating at a treatment temperature that can be set by means of said control and management unit;
- cooling said product that was previously heated in said induction furnace, by means of a cooling tank, substantially to a preset temperature;

characterized in that it comprises the following steps:

- measuring a first temperature of said product in output from said induction furnace by means of a first control pyrometer placed between said induction furnace and said cooling tank at a first distance from the outlet of said induction furnace;
- measuring a second temperature of said product in input to said cooling tank by means of at least one second control pyrometer placed between said first control pyrometer and said cooling tank at a predefined second distance from the outlet of said induction furnace;
- measuring said pulling force by means of a load cell placed along said line;
- varying, by means of said control and management unit, the power of said induction furnace, said speed of said product and said pulling force of said means for pulling and braking.

[0031] Further characteristics and advantages of the invention will become more apparent from the description of three preferred, but not exclusive, embodiments of a line and of a method for treating metal wires and/or strands, which are illustrated by way of non-limiting example with the aid of the accompanying drawings wherein:

Figure 1 is a schematic view of a first embodiment of the line according to the present invention;
Figure 2 is a schematic view of a second embodiment of the line according to the present invention;
Figure 3 is a schematic view of a third embodiment of the line according to the present invention;
Figure 4 is a first variation of the three embodiments shown in Figures 1 to 3;
Figure 5 is a second variation of the three embodiments shown in Figures 1 to 3;
Figure 6 is a control diagram of the method according to the present invention;
Figure 7 is a variation of the control diagram of the method according to the present invention.

[0032] With reference to Figures 1 to 3, the line for treating metal wires and/or strands, hereinafter generally referred to as product(s) and designated in the three provided embodiments with the reference numbers 1a, 1b and 1c, comprises:

- means for pulling and braking a product 2 for its movement along the lines 1a, 1b and 1c according to an advancement speed "V_{line}" and an advancement pulling force "P_{act}" that can be set by means of a control and management unit for the line 1a, 1b and 1c;
- an induction furnace 3 operating at a treatment temperature "T_t" that can be set by means of the control and management unit and is passed through by the product 2 in order to heat it;
- a cooling tank 4 placed downstream of the induction furnace 3 for the controlled cooling of the product 2 substantially to a preset temperature; and
- a first control pyrometer 5 placed between the induction furnace 3 and the cooling tank 4 at a first distance "d_{p1}" from the outlet of the induction furnace 3 and adapted to measure a first temperature "T_{P1}" of the product 2 in output from the induction furnace 3;
- at least one second control pyrometer 6 placed between the first control pyrometer 5 and the cooling tank 4 at a predefined second distance "d_{p2}" from the outlet of the induction furnace 3 in order to measure a second temperature "T_{p2}" of the product 2 in input to the cooling tank 4.

[0033] As will be better described below, both the first control pyrometer 5 and the second control pyrometer 6 can be fixed and/or movable along the line 1a, 1b and 1c together with and/or with respect to the induction furnace 3.

[0034] Advantageously, the control and management unit for the line 1a, 1b and 1c is configured to vary the power of the induction furnace 3 with the speed "V_{line}" of the product 2 and the pulling force "P_{act}" of the means for pulling and braking, which are set as a function of:

- the first temperature "T_{p1}", which varies as a function of the line speed "V_{line}" of the product, assuming that the second temperature "T_{p2}" is kept constant and substantially equal to the desired treatment temperature "T_t";
- the diameter "d_w" of the product 2;
- the advancement speed "V_{line}" of the lines 1a, 1b and 1c;
- the distances "d_{p1}" *and* "d_{p2}" of the control pyrometers 5 and 6; and
- the elongation percentage "ε" of the product 2, calculated as the difference between the rotation rate of the means for pulling and braking.

[0035] In more detail, with reference to the first embodiment shown in Figure 1, the line 1 is of the single-wire and double-capstan type.

[0036] In fact, the product 2 is a single wire and the means for pulling and braking comprise:

- an input capstan 7 placed upstream of the induction furnace 3, and
- an output capstan 8 placed downstream of the cooling tank 4;

[0037] Furthermore, a load cell 9 is placed between the cooling tank 4 and the output capstan 8, or integrated into the latter.

[0038] Differently, with reference to the second embodiment shown in Figure 2, the line 1b is of the single-wire and die-and-capstan type.

[0039] In fact, the product 2 is a single wire and the means for pulling and braking comprise:

- an input die 10, placed upstream of the induction furnace 3, and
- an output capstan 11, placed downstream of the cooling tank 4.

[0040] Furthermore, a load cell 12 is placed between the cooling tank 4 and the output capstan 11, or integrated into the latter, or integrated into the input die 10.

[0041] Moreover, with reference to the third embodiment shown in Figure 3, the line 1c is of the strand and double-capstan type with a stranding unit.

[0042] In fact, the product 2 is a strand and the means for pulling and braking comprise:

- an input stranding unit 13, placed upstream of the induction furnace 3,
- an input capstan 14, placed between the input stranding unit 13 and the induction furnace 3, and
- an output capstan 15, placed downstream of the cooling tank 4.

[0043] Furthermore, a load cell 16 is placed between the input capstan 14 and the induction furnace 3.

[0044] With reference to Figures 4 and 5, there can be variations 1d and 1e of the lines described above.

[0045] In the first variation, the second control pyrometer 6, fixed or moveable, is placed along the line 1d at the second distance *"d_{p2}"* as a function of the diameter "d_w" and of the speed *"V_{line}"*.

[0046] Differently, in the second variation the second control pyrometer 6, fixed or moveable, comprises a plurality of second control pyrometers, for example two, placed at an average distance *"d_{mp2}"* from the outlet of the induction furnace 3 equal to the second distance *"d_{p2}"* and at a constant distance from each other so as to define temperature thresholds in the neighborhood of diffusion, in order to improve the accuracy of the reading of the temperature *"T_{p2}"* and determine the optimal diffusion position.

[0047] According to the invention, the method for treating metal wires and/or strands, obtainable by means of the lines 1a, 1b, 1c, 1d and 1e, comprises the following steps:

- providing the product 2 to be treated, which as mentioned previously can be a single wire or a strand;
- advancing the product 2 on the line by means of means for pulling and braking, which comprise capstans, a die, and/or a stranding unit according to the type of line, according to an advancement speed "V_{line}" and an advancement pulling force *"P_{act}"* that can be set by means of a control and management unit for the line 1a, 1b, 1c, 1d or 1e;

- heating the product 2 by means of an induction furnace 3 placed on the line 1a, 1b, 1c, 1d or 1e and operating at a treatment temperature *"T_t"* that can be set by means of the control and management unit;
- cooling the product 2 that was previously heated in the induction furnace 3, by means of a cooling tank 4, substantially to a preset temperature;
- measuring the first temperature "T_{P1}" of the product 2 in output from the induction furnace 3 by means of the first control pyrometer 5 placed between the induction furnace 3 and the cooling tank 4 at a first distance "d_{p1}" from the outlet of the induction furnace 3;
- measuring the second temperature "T_{P2}" of the product 2 in input to the cooling tank 4 by means of the second control pyrometer 6 placed between the first control pyrometer 5 and the cooling tank 4 at a predefined second distance *"d_{p2}"* from the outlet of the induction furnace 3;
- measuring the pulling force *"P_{act}"* by means of the load cells 9, 12 or 16 placed along the line 1a, 1b, 1c, 1d or 1e;
- varying, by means of the control and management unit, the power of the induction furnace 3, the speed "V_{line}" of the product 2 and the pulling force *"P_{act}"* of the means for pulling and braking.

[0048] Advantageously, with reference to Figure 6, the method described herein can operate by controlling temperature.

[0049] In more detail, in this control logic, in the step of varying, the power of the induction furnace 3 is varied in order to bring the first temperature *"T_{p1}"* to a temperature estimated by a thermodynamic model as a function of the diameter "d_w", the second temperature *"T_{p2}"*, and the speed *"V_{line}"*.

[0050] As a consequence, the power of the induction furnace 3 varies linearly as the speed *"V_{line}"* varies and the second temperature *"T_{p2}"* is constant and equal to the treatment temperature *"T_t"*.

[0051] Furthermore, the pulling force *"P_{act}"* and the elongation percentage "ε" are constant as the speed *"V_{line}"* varies, according to the thermodynamic model mentioned above.

[0052] More specifically, in order to regulate the pulling force *"P_{act}"* and keep it constant, the driving torque of the means for pulling and braking is regulated as a function of the pulling force *"P_{act}"* and of the elongation percentage *"ε"*.

[0053] Alternatively, with reference to Figure 7, the method described herein can operate by controlling elongation, pulling force, and speed.

[0054] In more detail, in this further control logic, in the step of varying, the power of the induction furnace 3 is varied in order to vary the first temperature "T_{p1}" so as to keep the pulling force *"P_{act}"* and the elongation percentage "ε" constant as the speed *"V_{line}"* varies.

[0055] Such variation of the first temperature *"T_{p1}"* occurs independently as a function of the pulling force *"P_{act}"*, for a die-and-capstan line, or as a function of the elongation percentage *"ε"*, for a double-capstan line.

[0056] As a consequence, as the speed *"V_{line}"* increases, while keeping constant the first temperature *"T_{p1}"* and the pulling force *"P_{act}"*, the elongation percentage "ε" decreases, as happens in conventional forms of control logic.

[0057] In practice it has been found that the line and the method according to the present invention fully achieve the set aim and objects.

[0058] The line and the method, thus conceived, are susceptible of numerous modifications and variations, all of which are within the scope of the appended claims.

[0059] Moreover, all the details may be substituted by other, technically equivalent elements.

[0060] In practice the materials employed, provided they are compatible with the specific use, and the contingent dimensions and shapes, may be any according to requirements and to the state of the art.

[0061] The disclosures in Italian Patent Application No. 102023000011799 from which this application claims priority are incorporated herein by reference.

[0062] Where technical features mentioned in any claim are followed by reference signs, those reference signs have been included for the sole purpose of increasing the intelligibility of the claims and accordingly, such reference signs do not have any limiting effect on the interpretation of each element identified by way of exam-

ple by such reference signs.

Claims

1. A line (1a, 1b, 1c, 1d, 1e) for treating metal wires and/or strands, which comprises:

   - means for pulling and braking a product (2) for its movement along said line (1a, 1b, 1c, 1d, 1e) according to an advancement speed (V_{line}) and an advancement pulling force (P_{act}) that can be set by means of a control and management unit for said line (1a, 1b, 1c, 1d, 1e);
   - an induction furnace (3) operating at a treatment temperature (T_t) that can be set by means of said control and management unit and is passed through by said product (2) in order to heat it;
   - a cooling tank (4) placed downstream of said induction furnace (3) for the controlled cooling of said product (2) substantially to a preset temperature; and
   - a first control pyrometer (5) placed between said induction furnace (3) and said cooling tank (4) and adapted to measure a first temperature (T_{P1}) of said product (2) in output from said induction furnace (3);

   characterized in that said first control pyrometer (5) is placed at a first distance (d_{p1}) from the outlet of said induction furnace (3) in order to measure said first temperature (T_{p1}) and **characterized in that** it comprises at least one second control pyrometer (6) arranged between said first control pyrometer (5) and said cooling tank (4) at a second distance (d_{p2}) from the outlet of said induction furnace (3) which is predefined for measuring a second temperature (T_{p2}) of said product (2) in input to said cooling tank (4); said control and management unit of said line (1a, 1b, 1c, 1d, 1e) being configured to vary the power of said induction furnace (3) with said speed (V_{line}) of said product (2) and said pulling force (P_{act}) of said means for pulling and braking, which are set as a function of:

   - said first temperature (T_{p1}), which varies as a function of said line speed (V_{line}) of the product, assuming that said second temperature (T_{p2}) is kept constant and substantially equal to said desired treatment temperature (T_t);
   - the diameter (d_w) of said product (2);
   - said advancement speed (V_{line}) of said line (1a, 1b, 1c, 1d, 1e);
   - said distances d_{p1}, d_{p2}) of said control pyrometers (5, 6); and
   - the elongation percentage (ε) of said product (2), calculated as the difference between the rotation rate of said means for pulling and braking.

2. The line (1d) according to claim 1, **characterized in that** said first control pyrometer (5) is fixed or movable along said line (1a, 1b, 1c, 1d, 1e) together with and/or with respect to said induction furnace (3) and **in that** said at least one second control pyrometer (6) is fixed or movable along said line (1a, 1b, 1c, 1d, 1e) together with and/or with respect to said induction furnace (3).

3. The line (1d) according to claim 2, **characterized in that** said at least one second control pyrometer (6) is fixed or movable and is placed along said line (1d) at said second distance (d_{p2}) as a function of said diameter (d_w) and said speed (V_{line}).

4. The line (1e) according to one or more of claims 1 to 3, **characterized in that** said at least one second control pyrometer (6) comprises a plurality of second control pyrometers (6) arranged at an average distance (d_{mp2}) from the outlet of said induction furnace (3) that is equal to said second distance (d_{p2}) and at a constant distance from each other, so as to define temperature thresholds in the neighborhood of diffusion, in order to improve the accuracy of the reading of said second temperature (T_{p2}) and determine the optimal diffusion position.

5. The line (1a) according to one or more of the preceding claims, **characterized in that** it is of the single-wire and double-capstan type; said means for pulling and braking comprising:

   - an input capstan (7) placed upstream of said induction furnace (3), and
   - an output capstan (8) placed downstream of said cooling tank (4);

   there being furthermore a load cell (9) placed between said cooling tank (4) and said output capstan (8) or integrated into said output capstan (8).

6. The line (1b) according to one or more of claims 1 to 4, **characterized in that** it is of the single-wire and die-and-capstan type; said means for pulling and braking comprising:

   - an input die (10), placed upstream of said induction furnace (3), and
   - an output capstan 11), placed downstream of said cooling tank (4);

   there being furthermore a load cell (12) placed between said cooling tank (4) and said output capstan (11) or integrated into said output capstan (11) or integrated into said input die (10).

7. The line (1c) according to one or more of claims 1 to 4, **characterized in that** it is of the strand and double-capstan type with a stranding unit; said means pulling and braking comprising:

- an input stranding unit (13), placed upstream of said induction furnace (3),
- an input capstan (14), placed between said input stranding unit (13) and said induction furnace (3), and
- an output capstan (15), placed downstream of said cooling tank (4);

there being furthermore a load cell (16), placed between said input capstan (14) and said induction furnace (3).

8. A method for treating metal cables, obtainable by means of a line (1a, 1b, 1c, 1d, 1e) according to one or more of the preceding claims, which comprises the following steps:

- providing a product (2) to be treated;
- advancing said product (2) on said line by virtue of means for pulling and braking according to an advancement speed (V_{line}) and an advancement pulling force (P_{act}) that can be set by means of a control and management unit for said line (1a, 1b, 1c, 1d, 1e);
- heating said product (2) by means of an induction furnace (3) placed on said line (1a, 1b, 1c, 1d, 1e) and operating at a treatment temperature (T_t) that can be set by means of said control and management unit;
- cooling said product (2) that was previously heated in said induction furnace (3), by means of a cooling tank (4), substantially to a preset temperature;

characterized in that it comprises the following steps:

- measuring a first temperature (T_{p1}) of said product (2) in output from said induction furnace (3) by means of a first control pyrometer (5) placed between said induction furnace (3) and said cooling tank (4) at a first distance (d_{p1}) from the outlet of said induction furnace (3);
- measuring a second temperature (T_{p2}) of said product (2) in input to said cooling tank (4) by means of at least one second control pyrometer (6) placed between said first control pyrometer (5) and said cooling tank (4) at a predefined second distance (d_{p2}) from the outlet of said induction furnace (3);
- measuring said pulling force (P_{act}) by means of a load cell (9, 12, 16) placed along said line (1a, 1b, 1c, 1d, 1e);
- varying, by means of said control and management unit, the power of said induction furnace (3), said speed (V_{line}) of said product (2) and said pulling force (P_{act}) of said means for pulling and braking.

9. The method according to claim 8, **characterized in that** said first control pyrometer (5) is fixed or movable along said line (1a, 1b, 1c, 1d, 1e) together with and/or with respect to said induction furnace (3) and **in that** said at least one second control pyrometer (6) is fixed or movable along said line (1a, 1b, 1c, 1d, 1e) together with and/or with respect to said induction furnace (3).

10. The method according to claim 8 or 9, **characterized in that** said second distance (d_{p2}) is variable as a function of said diameter (d_w) and said speed (V_{line}).

11. The method according to one or more of claims 8 to 10, **characterized in that** said step of measuring said second temperature (T_{p2}) is performed by means of a plurality of second control pyrometers (6) arranged at an average distance (d_{mp2}) from the outlet of said induction furnace (3) that is equal to said second distance (d_{p2}) and at a constant distance from each other, so as to define temperature thresholds in the neighborhood of diffusion, in order to improve the accuracy of the reading of said second temperature (T_{p2}) and determine the optimal diffusion position.

12. The method according to one or more of claims 8 to 11, **characterized in that** it operates by controlling temperature.

13. The method according to claim 12, **characterized in that** in said step of varying, the power of said induction furnace (3) is varied in order to bring said first temperature (T_{p1}) to a temperature estimated by a thermodynamic model as a function of said diameter (d_w), said second temperature (T_{p2}), and said speed (V_{line}).

14. The method according to claim 13, **characterized in that** said pulling force (P_{act}) is kept constant by regulating the driving torque of said means pulling and braking as a function of said pulling force (P_{act}) and said elongation percentage (ε).

15. The method according to one or more of claims 8 to 11, **characterized in that** it operates by controlling elongation, pulling force, and speed.

16. The method according to claim 15, **characterized in that**, in said step of varying, the power of said induction furnace (3) is varied in order to vary said first temperature (T_{p1}) so as to keep said pulling force

(P_{act}) and said elongation percentage (ε) constant as said speed (V_{line}) varies.

17. The method according to claim 16, **characterized in that** said first temperature (T_{p1}) is independently regulated as a function of said pulling force (P_{act}) or said elongation percentage (ε).

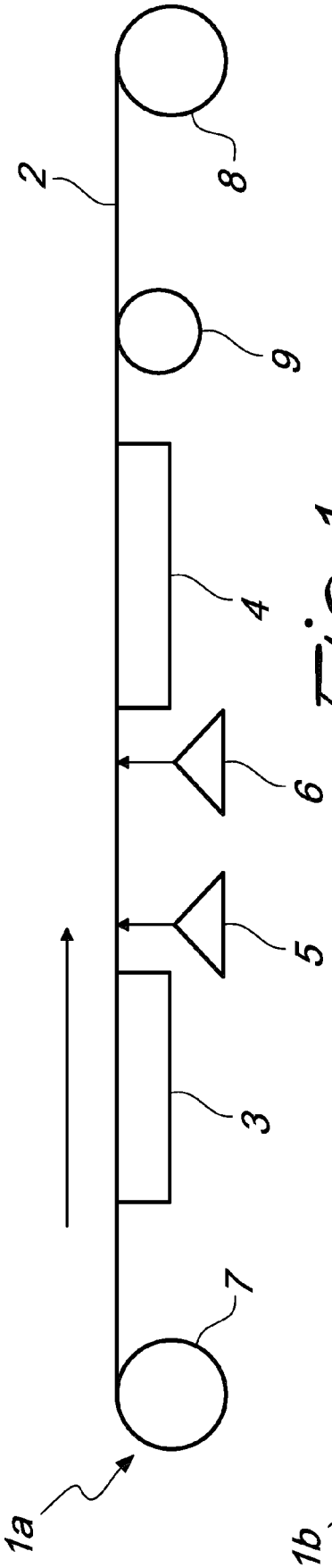

Fig. 1

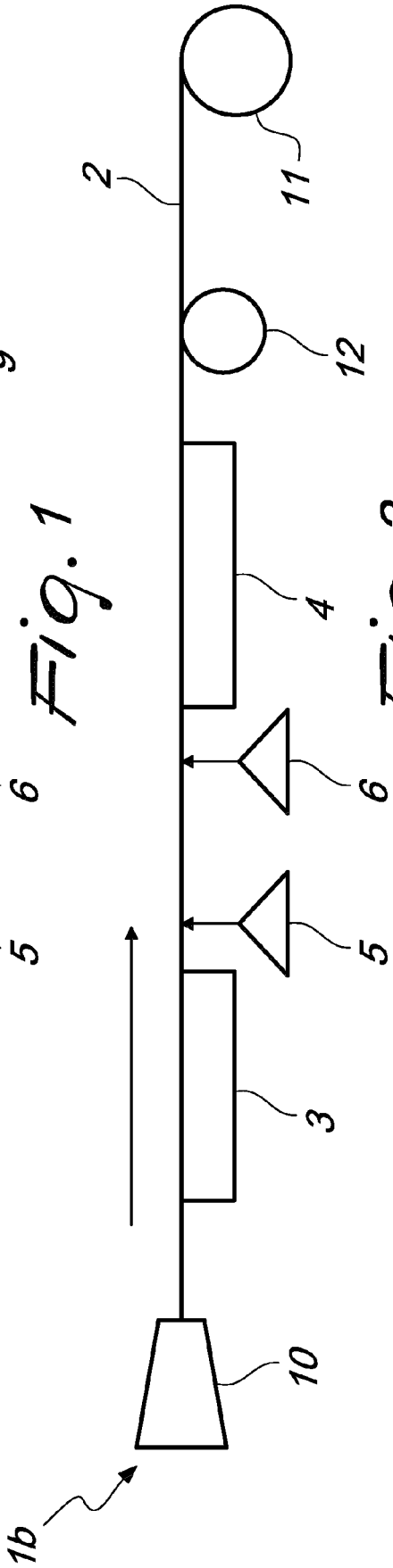

Fig. 2

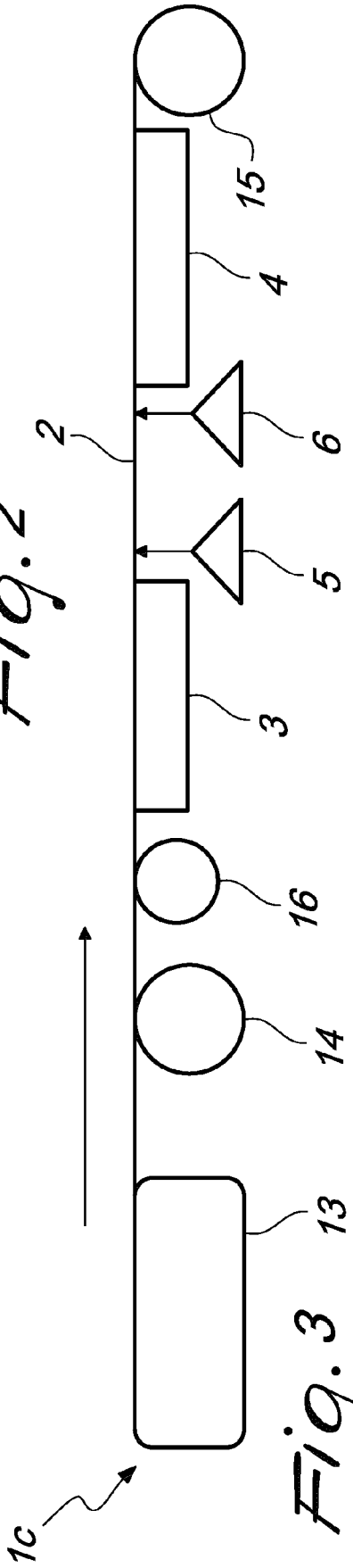

Fig. 3

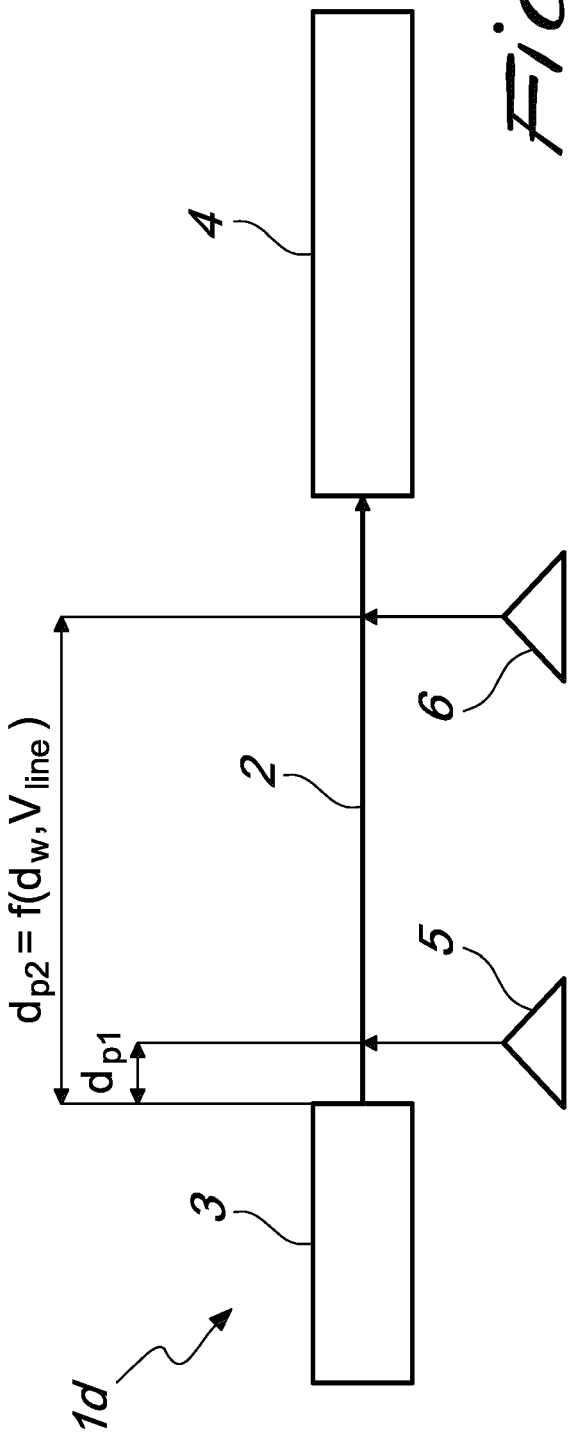
1d
3
d_{p1}
$d_{p2} = f(d_w, V_{line})$
5
2
6
4

Fig. 4

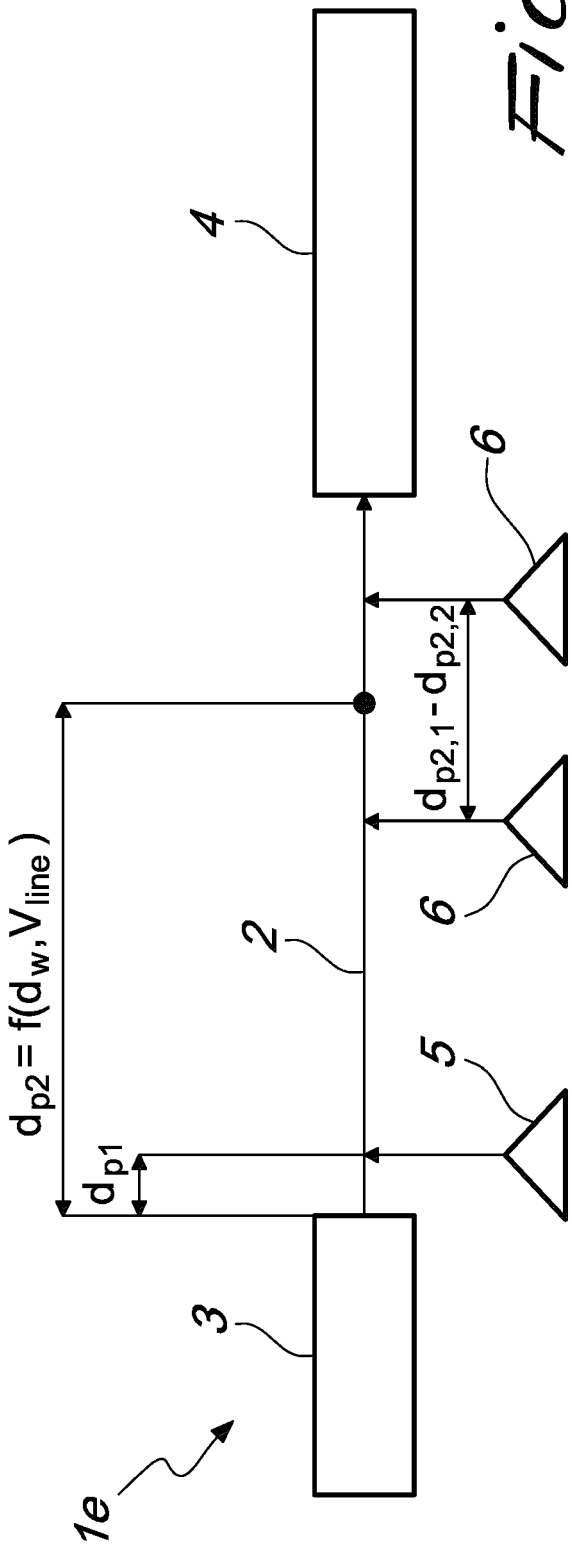
1e
3
d_{p1}
$d_{p2} = f(d_w, V_{line})$
5
2
6
$d_{p2,1} - d_{p2,2}$
6
4

Fig. 5

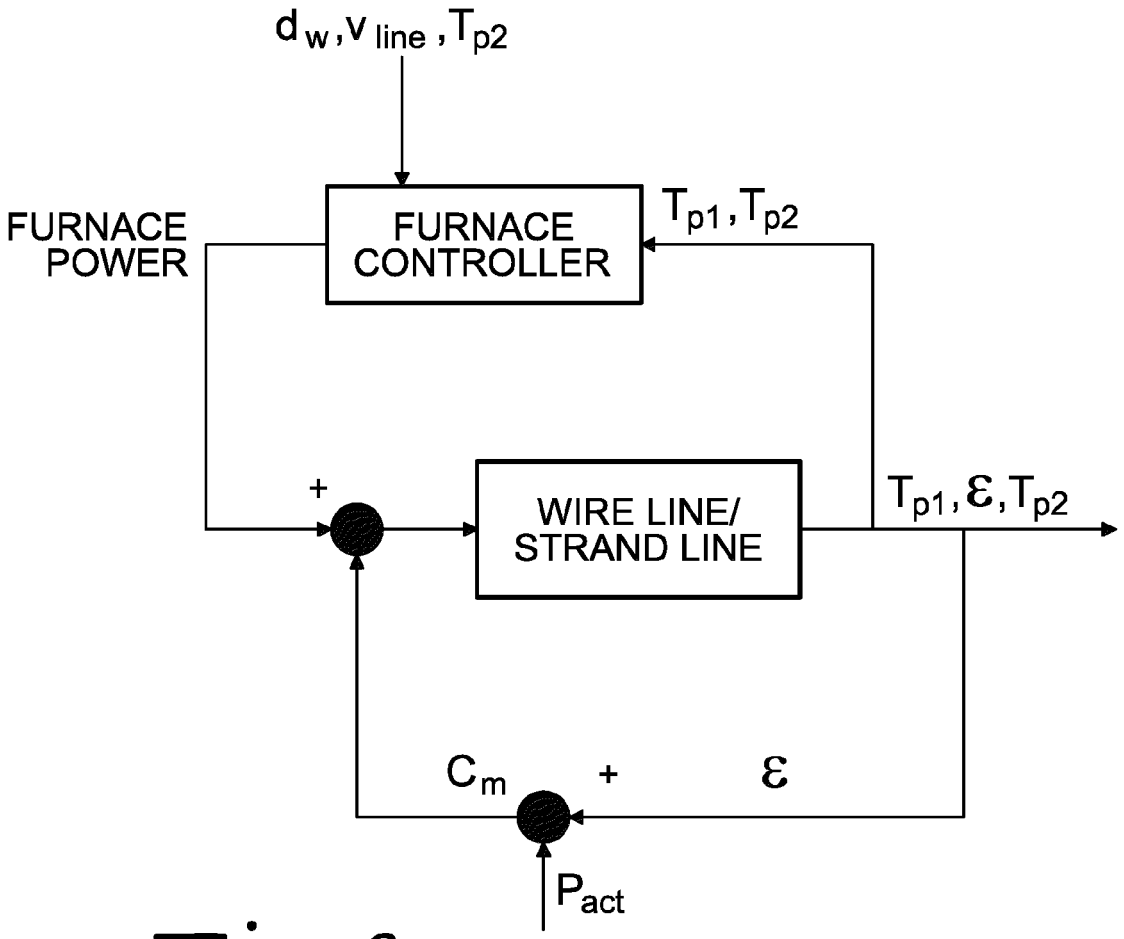
d_w, v_{line}, T_{p2}
FURNACE POWER
FURNACE CONTROLLER
T_{p1}, T_{p2}
+
WIRE LINE/ STRAND LINE
$T_{p1}, \varepsilon, T_{p2}$
C_m
+
ε
P_{act}

Fig. 6

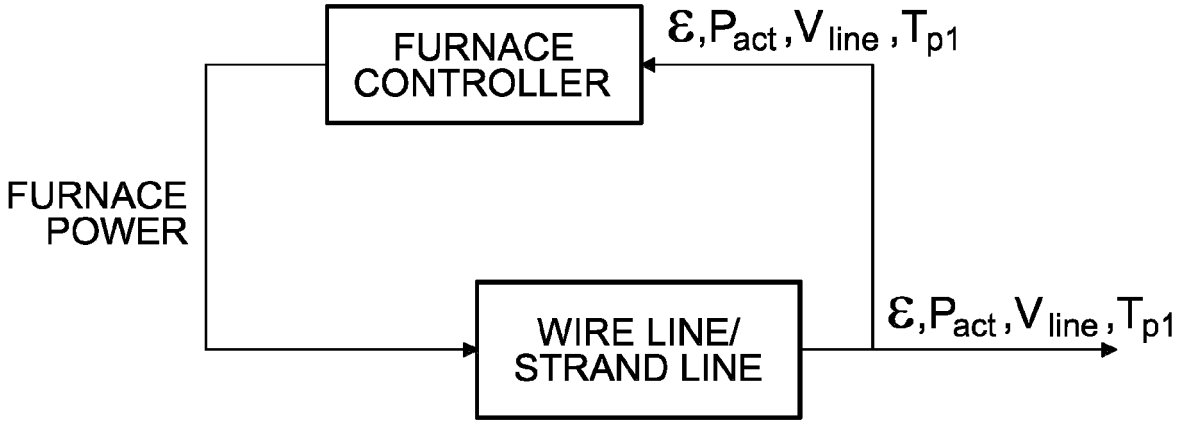
FURNACE CONTROLLER
$\varepsilon, P_{act}, V_{line}, T_{p1}$
FURNACE POWER
WIRE LINE/ STRAND LINE
$\varepsilon, P_{act}, V_{line}, T_{p1}$

Fig. 7

Europäisches Patentamt
European Patent Office
Office européen des brevets

EUROPEAN SEARCH REPORT

Application Number
EP 24 18 0115

DOCUMENTS CONSIDERED TO BE RELEVANT

Category	Citation of document with indication, where appropriate, of relevant passages	Relevant to claim	CLASSIFICATION OF THE APPLICATION (IPC)
X	US 3 045 094 A (COSCIA LEWIS G ET AL) 17 July 1962 (1962-07-17) * abstract * -----	1-17	INV. C21D1/02 C21D1/18 C21D1/42 C21D8/06 C21D9/52
X	WO 89/02936 A1 (US AUTOMATION CO [US]) 6 April 1989 (1989-04-06) * abstract * -----	1-17	
A	WO 2022/258376 A1 (PRIMETALS TECHNOLOGIES AUSTRIA GMBH [AT]) 15 December 2022 (2022-12-15) * abstract * -----	1-17	
A	CA 966 400 A (BAUSTAHLGEWEBE GMBH) 22 April 1975 (1975-04-22) * abstract * -----	1-17	
A	EP 1 178 126 A1 (NIPPON STEEL CORP [JP]) 6 February 2002 (2002-02-06) * abstract * -----	1-17	

TECHNICAL FIELDS SEARCHED (IPC)

C21D
C22F

The present search report has been drawn up for all claims

Place of search	Date of completion of the search	Examiner
The Hague	30 September 2024	Vermeulen, Yves

CATEGORY OF CITED DOCUMENTS

X : particularly relevant if taken alone
Y : particularly relevant if combined with another document of the same category
A : technological background
O : non-written disclosure
P : intermediate document

T : theory or principle underlying the invention
E : earlier patent document, but published on, or after the filing date
D : document cited in the application
L : document cited for other reasons
.....
& : member of the same patent family, corresponding document

1

EPO FORM 1503 03.82 (P04C01)

ANNEX TO THE EUROPEAN SEARCH REPORT ON EUROPEAN PATENT APPLICATION NO. EP 24 18 0115

This annex lists the patent family members relating to the patent documents cited in the above-mentioned European search report.
The members are as contained in the European Patent Office EDP file on
The European Patent Office is in no way liable for these particulars which are merely given for the purpose of information.

30-09-2024

Patent document cited in search report		Publication date	Patent family member(s)			Publication date
US 3045094	A	17-07-1962	NONE			
WO 8902936	A1	06-04-1989	CA	1336157	C	04-07-1995
			EP	0406237	A1	09-01-1991
			US	4872923	A	10-10-1989
			WO	8902936	A1	06-04-1989
WO 2022258376	A1	15-12-2022	CN	117545564	A	09-02-2024
			EP	4101552	A1	14-12-2022
			EP	4351812	A1	17-04-2024
			US	2024269734	A1	15-08-2024
			WO	2022258376	A1	15-12-2022
CA 966400	A	22-04-1975	AT	328487	B	25-03-1976
			AU	471451	B2	29-04-1976
			BE	783366	A	13-11-1972
			CA	966400	A	22-04-1975
			CH	590931	A5	31-08-1977
			CS	171166	B2	29-10-1976
			DD	96259	A5	12-03-1973
			DE	2123687	A1	30-11-1972
			ES	402594	A1	16-05-1976
			FR	2137842	A1	29-12-1972
			GB	1367408	A	18-09-1974
			HU	166803	B	28-06-1975
			IL	39414	A	13-03-1975
			IT	955362	B	29-09-1973
			JP	S5518768	B1	21-05-1980
			LU	65337	A1	22-11-1973
			NL	7206352	A	15-11-1972
			NO	133108	B	01-12-1975
			PL	75527	B1	31-12-1974
			RO	61281	A	15-11-1976
			SE	393817	B	23-05-1977
			US	3933534	A	20-01-1976
			ZA	723237	B	19-12-1973
EP 1178126	A1	06-02-2002	DE	60034943	T2	28-02-2008
			EP	1178126	A1	06-02-2002
			JP	4435954	B2	24-03-2010
			JP	2001240941	A	04-09-2001
			US	6602359	B1	05-08-2003
			WO	0148258	A1	05-07-2001

EPO FORM P0459

For more details about this annex : see Official Journal of the European Patent Office, No. 12/82

REFERENCES CITED IN THE DESCRIPTION

This list of references cited by the applicant is for the reader's convenience only. It does not form part of the European patent document. Even though great care has been taken in compiling the references, errors or omissions cannot be excluded and the EPO disclaims all liability in this regard.

Patent documents cited in the description

- IT 102023000011799 **[0061]**