(19) Europäisches Patentamt
European Patent Office
Office européen des brevets

(11) **EP 4 545 712 A1**

(12) **EUROPEAN PATENT APPLICATION**
published in accordance with Art. 153(4) EPC

(43) Date of publication:
30.04.2025 Bulletin 2025/18

(21) Application number: **23865316.6**

(22) Date of filing: **31.08.2023**

(51) International Patent Classification (IPC):
E02F 3/43 *(2006.01)* ***E02F 9/20*** *(2006.01)*

(52) Cooperative Patent Classification (CPC):
E02F 3/43; E02F 9/20

(86) International application number:
PCT/JP2023/031879

(87) International publication number:
WO 2024/057961 (21.03.2024 Gazette 2024/12)

(84) Designated Contracting States:
AL AT BE BG CH CY CZ DE DK EE ES FI FR GB GR HR HU IE IS IT LI LT LU LV MC ME MK MT NL NO PL PT RO RS SE SI SK SM TR
Designated Extension States:
BA
Designated Validation States:
KH MA MD TN

(30) Priority: **15.09.2022 JP 2022147195**

(71) Applicant: **Komatsu Ltd.**
Minato-ku
Tokyo 107-8414 (JP)

(72) Inventor: **MATSUYAMA, Takafumi**
Tokyo 107-8414 (JP)

(74) Representative: **Grünecker Patent- und Rechtsanwälte**
PartG mbB
Leopoldstraße 4
80802 München (DE)

(54) **SYSTEM INCLUDING WORK MACHINE, WORK MACHINE CONTROLLER, AND METHOD OF CONTROLLING WORK MACHINE**

(57) A trace of an automatically controlled work implement is appropriately set. A controller of a work machine obtains a reference point of a container detected by an object sensor, obtains the trace of the work implement while the work machine is operated, and extracts a position of a feature point that defines the trace with the reference point being defined as a reference.

FIG.7

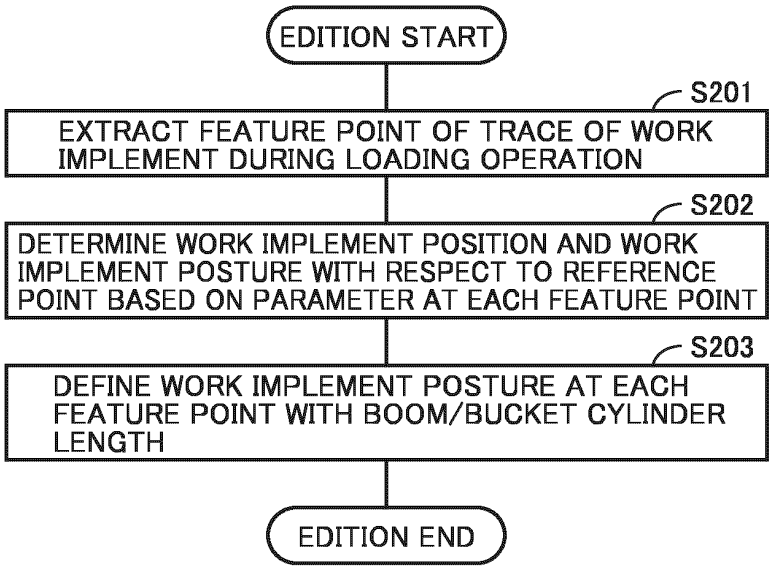

EP 4 545 712 A1

Description

TECHNICAL FIELD

[0001] The present disclosure relates to a system including a work machine, a work machine controller, and a method of controlling a work machine.

BACKGROUND ART

[0002] For example, WO2020/224768 (PTL 1) discloses a conventional wheel loader.

CITATION LIST

PATENT LITERATURE

[0003] PTL 1: WO2020/224768

SUMMARY OF INVENTION

TECHNICAL PROBLEM

[0004] A wheel loader repeatedly performs an excavation work and a loading work. In order to automate the loading work, a trace of an automatically controlled work implement should appropriately be set.

[0005] The present disclosure proposes a system including a work machine, a work machine controller, and a method of controlling a work machine that allow appropriate setting of a trace of an automatically controlled work implement.

SOLUTION TO PROBLEM

[0006] According to one aspect of the present disclosure, a system including a work machine is proposed, the system including a work machine main body, a work implement attached to the work machine main body, the work implement including a bucket, a work implement posture sensor that detects a posture of the work implement, an object sensor that detects an object around the work machine main body, and a controller that communicates with the work implement posture sensor and the object sensor. The controller obtains a reference point of a container detected by the object sensor. The controller obtains a trace of the work implement while an operation of the work machine is performed. The controller extracts a position of a feature point that defines the trace with the reference point being defined as a reference.

[0007] According to one aspect of the present disclosure, a work machine controller is proposed. The controller obtains a reference point of a container detected by an object sensor. The controller obtains a trace of a work implement while the work machine is operated. The controller extracts a position of a feature point that defines the trace with the reference point being defined as a reference.

[0008] According to one aspect of the present disclosure, a method of controlling a work machine is proposed. The method includes obtaining a reference point of a container detected by an object sensor, obtaining a trace of a work implement while the work machine is operated, and extracting a position of a feature point that defines the trace with the reference point being defined as a reference.

ADVANTAGEOUS EFFECTS OF INVENTION

[0009] According to the system including the work machine, the work machine controller, and the method of controlling the work machine in the present disclosure, the trace of the automatically controlled work implement can appropriately be set.

BRIEF DESCRIPTION OF DRAWINGS

[0010]

Fig. 1 is a side view of a wheel loader as an exemplary work machine.

Fig. 2 is a block diagram showing an overall configuration of a control system that controls the wheel loader.

Fig. 3 is a plan view of the wheel loader that performs excavation and loading works.

Fig. 4 is a block diagram showing a configuration of an automatic control system that controls the wheel loader.

Fig. 5 is a flowchart showing a flow of processing for recording work implement control when a skilled operator performs loading into a container.

Fig. 6 is a diagram showing a trace of a work implement when the skilled operator performs loading into the container.

Fig. 7 is a flowchart showing a flow of processing for editing a recorded parameter.

Fig. 8 shows a graph of change in cylinder length during a loading work.

Fig. 9 is a diagram schematically showing a posture of the wheel loader when a bucket dump operation is started.

Fig. 10 is a diagram schematically showing a posture of the wheel loader when a cutting edge reaches a farthest position.

Fig. 11 is a diagram schematically showing a posture of the wheel loader when the bucket dump operation is stopped.

Fig. 12 is a diagram schematically showing a posture of the wheel loader when a boom raising operation is stopped.

Fig. 13 is a diagram schematically showing a posture of the wheel loader when a bucket tilt operation is started.

Fig. 14 is a diagram schematically showing a posture of the wheel loader when the bucket tilt operation is

stopped.

Fig. 15 is a flowchart showing a flow of processing for loading loads carried in the bucket into the container under automatic control.

DESCRIPTION OF EMBODIMENTS

[0011] An embodiment will be described below with reference to the drawings. The same components and constituent elements in the description below have the same reference characters allotted and their labels and functions are also the same. Therefore, detailed description thereof will not be repeated. Extraction of any features from the embodiment and any combination thereof are also originally intended.

<Overall Construction of Wheel Loader 1>

[0012] In an embodiment, a wheel loader 1 as an exemplary work machine will be described. Fig. 1 is a side view of wheel loader 1 as an exemplary work machine.

[0013] As shown in Fig. 1, wheel loader 1 includes a vehicular body frame 2, a work implement 3, a travel apparatus 4, and a cab 5. A vehicular body of wheel loader 1 is composed of vehicular body frame 2, cab 5, and the like. Work implement 3 and travel apparatus 4 are attached to the vehicular body of wheel loader 1. A main body of wheel loader 1 includes the vehicular body and travel apparatus 4.

[0014] Travel apparatus 4 serves for travel of the vehicular body of wheel loader 1 and includes running wheels 4a and 4b. Wheel loader 1 is a wheeled vehicle provided with running wheels 4a and 4b as rotational bodies for travel, on opposing sides in a lateral direction of the vehicular body. Wheel loader 1 is self-propelled as running wheels 4a and 4b are rotationally driven and can perform desired works with work implement 3. Travel apparatus 4 corresponds to an exemplary travel unit.

[0015] A direction in which wheel loader 1 travels straight is herein referred to as a fore/aft direction of wheel loader 1. In the fore/aft direction of wheel loader 1, a side where work implement 3 is arranged with respect to vehicular body frame 2 is defined as the fore direction and a side opposite to the fore direction is defined as the aft direction. The lateral direction of wheel loader 1 refers to a direction orthogonal to the fore/aft direction when wheel loader 1 on a flat ground is viewed in a plan view. A right side and a left side in the lateral direction when one faces the fore direction are defined as a right direction and a left direction, respectively. An upward/downward direction of wheel loader 1 is a direction orthogonal to the plane defined by the fore/aft direction and the lateral direction. A side where the ground is located and a side where the sky is located in the upward/downward direction are defined as a lower side and an upper side, respectively.

[0016] Vehicular body frame 2 includes a front frame 2a and a rear frame 2b. Front frame 2a is arranged in front of rear frame 2b. Front frame 2a and rear frame 2b are attached to each other as being laterally operable.

[0017] A pair of steering cylinders 11 is attached across front frame 2a and rear frame 2b. Steering cylinder 11 is a hydraulic cylinder. As steering cylinder 11 extends and contracts with hydraulic oil from a steering pump, a direction of travel of wheel loader 1 laterally changes. Vehicular body frame 2 in an articulated structure is composed of front frame 2a and rear frame 2b. Wheel loader 1 is an articulated work machine in which front frame 2a and rear frame 2b are coupled to allow a flection operation.

[0018] Work implement 3 and a pair of running wheels (front wheels) 4a are attached to front frame 2a. Work implement 3 is attached in front of the main body of wheel loader 1. Work implement 3 is supported by the vehicular body of wheel loader 1. Work implement 3 includes a boom 14 and a bucket 6. Bucket 6 is arranged at a tip end of work implement 3. Bucket 6 is a work tool for excavation and loading. A cutting edge 6a is a tip end portion of bucket 6. A rear surface 6b is a part of an outer surface of bucket 6. Rear surface 6b is formed from a plane. Rear surface 6b extends rearward from cutting edge 6a.

[0019] Boom 14 has a base end portion rotatably attached to front frame 2a by a boom pin 9. Bucket 6 is rotatably attached to boom 14 by a bucket pin 17 located at a tip end of boom 14. Boom pin 9 and bucket pin 17 correspond to a plurality of articulations of work implement 3.

[0020] Work implement 3 further includes a bell crank 18 and a link 15. Bell crank 18 is rotatably supported on boom 14 by a support pin 18a located substantially in a center of boom 14. Link 15 is coupled to a coupling pin 18c provided at a tip end portion of bell crank 18. Link 15 couples bell crank 18 and bucket 6 to each other.

[0021] Front frame 2a and boom 14 are coupled to each other by a pair of boom cylinders 16. Boom cylinder 16 is a hydraulic cylinder. Boom cylinder 16 rotationally drives boom 14 upward and downward around boom pin 9. Boom cylinder 16 has a base end attached to front frame 2a. Boom cylinder 16 has a tip end attached to boom 14. Boom cylinder 16 is a hydraulic actuator that operates boom 14 upward and downward with respect to front frame 2a. With movement upward and downward of boom 14, bucket 6 attached at the tip end of boom 14 also moves upward and downward.

[0022] A bucket cylinder 19 couples bell crank 18 and front frame 2a to each other. Bucket cylinder 19 has a base end attached to front frame 2a. Bucket cylinder 19 has a tip end attached to a coupling pin 18b provided at a base end portion of bell crank 18. Bucket cylinder 19 is a hydraulic actuator to cause bucket 6 to pivot upward and downward with respect to boom 14. Bucket cylinder 19 is a work tool cylinder that drives bucket 6. Bucket cylinder 19 rotationally drives bucket 6 around bucket pin 17. Bucket 6 is constructed as being operable with respect to boom 14. Bucket 6 is constructed as being operable

with respect to front frame 2a.

[0023] Boom cylinder 16 and bucket cylinder 19 correspond to an exemplary work implement actuator that drives work implement 3.

[0024] Cab 5 on which an operator rides and a pair of running wheels (rear wheels) 4b are attached to rear frame 2b. Cab 5 in a box shape is arranged in the rear of boom 14. Cab 5 is carried on vehicular body frame 2. In cab 5, a seat where the operator of wheel loader 1 is seated, an operation apparatus 8 which will be described later, and the like are arranged.

[0025] Cab 5 is provided with a perception device 111. Perception device 111 is arranged, for example, in a ceiling portion of cab 5. Perception device 111 is mounted, for example, on an upper surface of cab 5. Perception device 111 is arranged, for example, in a front portion of cab 5. Perception device 111 is attached to cab 5, for example, as facing forward, and it can obtain information on the front of cab 5. Details of perception device 111 will be described later.

<System Configuration>

[0026] Fig. 2 is a block diagram showing an overall configuration of a control system that controls wheel loader 1.

[0027] An engine 21 is a drive source that generates drive force to drive work implement 3 and travel apparatus 4, and it is, for example, a diesel engine. A motor driven by a power storage, instead of engine 21, may be employed as the drive source, or both of the engine and the motor may be employed. Output from engine 21 is controlled by adjustment of an amount of fuel to be injected into a cylinder of engine 21.

[0028] Drive force generated by engine 21 is transmitted to a transmission 23. Transmission 23 converts drive force into appropriate torque and a rotation speed. An axle 25 is connected to an output shaft of transmission 23. Drive force converted by transmission 23 is transmitted to axle 25. Drive force is transmitted from axle 25 to running wheels 4a and 4b (Fig. 1). Wheel loader 1 thus travels. In wheel loader 1 in the embodiment, both of running wheel 4a and running wheel 4b implement drive wheels for travel of wheel loader 1 upon receiving drive force.

[0029] Some of drive force from engine 21 is transmitted to a work implement pump 13. Work implement pump 13 is a hydraulic pump driven by engine 21 to activate work implement 3 with hydraulic oil it delivers. Work implement 3 is driven by hydraulic oil from work implement pump 13. Hydraulic oil delivered by work implement pump 13 is supplied to boom cylinder 16 and bucket cylinder 19 through a main valve 32. As boom cylinder 16 extends and contracts upon receiving supply of hydraulic oil, boom 14 moves upward and downward. As bucket cylinder 19 extends and contracts upon receiving supply of hydraulic oil, bucket 6 pivots upward and downward.

[0030] Wheel loader 1 includes a vehicular body controller 50. Vehicular body controller 50 includes an engine controller 60, a transmission controller 70, and a work implement controller 80.

[0031] Vehicular body controller 50 is generally implemented by reading of various programs by a central processing unit (CPU). Vehicular body controller 50 includes a not-shown memory. The memory functions as a work memory, and various programs for performing functions of wheel loader 1 are stored in the memory.

[0032] Operation apparatus 8 is provided in cab 5. Operation apparatus 8 is operated by an operator. Operation apparatus 8 includes a plurality of types of operation members operated by the operator to operate wheel loader 1. Operation apparatus 8 includes an accelerator pedal 41 and a work implement control lever 42. Operation apparatus 8 may include a steering wheel, a shift lever, and the like which are not shown.

[0033] Accelerator pedal 41 is operated to set the target number of rotations of engine 21. Engine controller 60 controls output from engine 21 based on an amount of operation onto accelerator pedal 41. With increase in amount of operation (amount of pressing) onto accelerator pedal 41, output from engine 21 increases. With decrease in amount of operation onto accelerator pedal 41, output from engine 21 decreases. Transmission controller 70 controls transmission 23 based on the amount of operation onto accelerator pedal 41.

[0034] Work implement control lever 42 is operated to operate work implement 3. Work implement controller 80 controls electromagnetic proportional control valves 35 and 36 based on the amount of operation onto work implement control lever 42.

[0035] Electromagnetic proportional control valve 35 switches main valve 32 such that bucket cylinder 19 contracts to move bucket 6 in a dump direction (a direction in which the cutting edge of bucket 6 is lowered). Electromagnetic proportional control valve 35 switches main valve 32 such that bucket cylinder 19 extends to move bucket 6 in a tilt direction (a direction in which the cutting edge of bucket 6 is raised). Electromagnetic proportional control valve 36 switches main valve 32 such that boom cylinder 16 contracts to lower boom 14. Electromagnetic proportional control valve 36 switches main valve 32 such that boom cylinder 16 extends to raise boom 14.

[0036] A machine monitor 51 shows various types of information upon receiving input of a command signal from vehicular body controller 50. The various types of information shown on machine monitor 51 may be, for example, information on works performed by wheel loader 1, vehicular body information such as an amount of remaining fuel, a temperature of coolant, and a temperature of hydraulic oil, an image of surroundings obtained by image pick-up of the surroundings of wheel loader 1, and the like. Machine monitor 51 may be implemented by a touch panel, and in this case, a signal generated by touching by the operator onto a part of machine monitor

51 is outputted from machine monitor 51 to vehicular body controller 50.

<Excavation and Loading Works>

[0037] Wheel loader 1 in the present embodiment performs excavation and loading works to scoop an excavation target such as soil and to load the excavation target onto a loading target such as a dump truck. Fig. 3 is a plan view of wheel loader 1 that performs excavation and loading works. Fig. 3 illustrates wheel loader 1 that performs what is called a V shape work.

[0038] Fig. 3 (A) illustrates wheel loader 1 that performs what is called unloaded forward travel. Wheel loader 1 travels forward along an excavation path R1 toward an excavation target 310 such as soil. Wheel loader 1 plunges bucket 6 into excavation target 310 and stops forward travel. By raising bucket 6 with cutting edge 6a of bucket 6 dug into excavation target 310, the excavation work to scoop excavation target 310 in bucket 6 is performed.

[0039] Fig. 3 (B) illustrates wheel loader 1 that performs what is called loaded rearward travel. Excavation target 310 has been loaded in bucket 6. Wheel loader 1 travels rearward along excavation path R1 to a position from which it started forward travel in Fig. 3 (A).

[0040] Fig. 3 (C) illustrates wheel loader 1 that performs what is called loaded forward travel. With excavation target 310 having been loaded in bucket 6, wheel loader 1 travels forward toward a vessel 301 of a dump truck 300. Wheel loader 1 travels forward along a loading path R2 from the position where it started forward travel in Fig. 3 (A) toward dump truck 300. When wheel loader 1 approaches dump truck 300 and reaches a prescribed position, it loads excavation target 310 in bucket 6 into vessel 301. Vessel 301 corresponds to an exemplary "container" into which loads carried in work implement 3 are to be loaded.

[0041] Fig. 3 (D) illustrates wheel loader 1 that performs what is called unloaded rearward travel. While bucket 6 is empty as a result of full ejection of excavation target 310 in bucket 6 into vessel 301 of dump truck 300, wheel loader 1 travels rearward along loading path R2 to the position where it started forward travel in Fig. 3 (C).

[0042] Wheel loader 1 can thus repeatedly perform a series of works including excavation, rearward travel, dump approach, soil ejection, and rearward travel.

<Automatic Control System that Controls Wheel loader 1>

[0043] In automating a loading work for loading onto dump truck 300 by wheel loader 1, in order to more quickly perform the loading work while an amount of works is ensured without contact of bucket 6 with vessel 301, reproduction of operations of work implement 3 by a skilled operator under automatic control has been desired. Fig. 4 is a block diagram showing a configuration of an automatic control system that controls wheel loader 1.

[0044] An automation controller 100 is configured to transmit and receive a signal to and from vehicular body controller 50 described with reference to Fig. 2. Automation controller 100 is configured to transmit and receive a signal to and from an external information obtaining unit 110. External information obtaining unit 110 includes perception device 111 and a positional information obtaining device 112. Perception device 111 and positional information obtaining device 112 are mounted on wheel loader 1.

[0045] Perception device 111 obtains information on surroundings of wheel loader 1. Perception device 111 is attached, for example, to a front portion of the upper surface of cab 5. Perception device 111 corresponds to an exemplary "object sensor" that detects an object around the main body of wheel loader 1.

[0046] Perception device 111 contactlessly detects a direction of an object outside wheel loader 1 and a distance to the object. Perception device 111 is implemented, for example, by light detection and ranging (LiDAR) that obtains information on an object by emission of laser beams. Perception device 111 may be implemented by a visual sensor including a camera. Perception device 111 may be implemented by radio detection and ranging (Radar) that obtains information on an object by emission of radio waves. Perception device 111 may be implemented by an infrared sensor.

[0047] Positional information obtaining device 112 obtains information on a current position of wheel loader 1. Positional information obtaining device 112 obtains, for example, positional information of wheel loader 1 in a global coordinate system with the Earth being defined as a reference, with the use of a satellite positioning system. Positional information obtaining device 112 uses, for example, global navigation satellite systems (GNSS) and includes a GNSS receiver. The satellite positioning system calculates a position of wheel loader 1 by computing a position of an antenna of the GNSS receiver based on a positioning signal received from a satellite by the GNSS receiver.

[0048] External information on the outside of wheel loader 1 obtained by perception device 111 and positional information of wheel loader 1 obtained by positional information obtaining device 112 are inputted to automation controller 100.

[0049] Vehicular body controller 50 is configured to transmit and receive a signal to and from a vehicle information obtaining unit 120, and receives input of information on wheel loader 1 obtained by vehicle information obtaining unit 120. Vehicle information obtaining unit 120 is composed of various sensors mounted on wheel loader 1. Vehicle information obtaining unit 120 includes an articulation angle sensor 121, a vehicle speed sensor 122, a boom angle sensor 123, a bucket angle sensor 124, and a boom cylinder pressure sensor 125.

[0050] Articulation angle sensor 121 detects an articu-

lation angle which is an angle formed between front frame 2a and rear frame 2b, and generates a signal indicating the detected articulation angle. Articulation angle sensor 121 outputs a signal indicating the articulation angle to vehicular body controller 50.

[0051] Vehicle speed sensor 122 detects a speed of movement of wheel loader 1 by travel apparatus 4, for example, by detection of a rotation speed of an output shaft of transmission 23 and generates a signal indicating the detected vehicle speed. Vehicle speed sensor 122 outputs the signal indicating the vehicle speed to vehicular body controller 50. Vehicle speed sensor 122 corresponds to an exemplary travel sensor that detects a status of travel of travel apparatus 4 (travel unit).

[0052] Boom angle sensor 123 is implemented, for example, by a rotary encoder provided in boom pin 9 which is a portion of attachment of boom 14 to vehicular body frame 2. Boom angle sensor 123 detects an angle of boom 14 with respect to a horizontal direction and generates a signal indicating the detected angle of boom 14. Boom angle sensor 123 outputs the signal indicating the angle of boom 14 to vehicular body controller 50.

[0053] Bucket angle sensor 124 is implemented, for example, by a rotary encoder provided in support pin 18a which is a rotation shaft of bell crank 18. Bucket angle sensor 124 detects an angle of bucket 6 with respect to boom 14 and generates a signal indicating the detected angle of bucket 6. Bucket angle sensor 124 outputs the signal indicating the angle of bucket 6 to vehicular body controller 50.

[0054] Boom angle sensor 123 and bucket angle sensor 124 correspond to an exemplary "work implement posture sensor" that detects a posture of work implement 3.

[0055] Boom cylinder pressure sensor 125 detects a pressure on a bottom side (boom bottom pressure) of boom cylinder 16 and generates a signal indicating the detected boom bottom pressure. The boom bottom pressure becomes higher while bucket 6 is loaded and becomes lower while the bucket is unloaded. Boom cylinder pressure sensor 125 outputs a signal indicating the boom bottom pressure to vehicular body controller 50.

[0056] Vehicular body controller 50 outputs information inputted from vehicle information obtaining unit 120 to automation controller 100. Automation controller 100 receives detection values from vehicle speed sensor 122, boom angle sensor 123, and bucket angle sensor 124 through vehicular body controller 50.

[0057] An actuator 140 is configured to transmit and receive a signal to and from vehicular body controller 50. Upon receiving a command signal from vehicular body controller 50, actuator 140 is driven. Actuator 140 includes a brake EPC (electromagnetic proportional control valve) 141 for activation of a brake of travel apparatus 4, a steering EPC 142 for adjustment of a travel direction of wheel loader 1, a work implement EPC 143 for operations of work implement 3, and a hydraulic mechanical transmission (HMT) 144.

[0058] Electromagnetic proportional control valves 35 and 36 shown in Fig. 2 implement work implement EPC 143. Transmission 23 shown in Fig. 2 is implemented as HMT 144 that utilizes electronic control. Transmission 23 may be a hydro-static transmission (HST). A power transmission apparatus that transmits motive power from engine 21 to running wheels 4a and 4b may include an electric drive apparatus such as a diesel electric drive apparatus, and may include any combination of the HMT, the HST, and the electric drive apparatus.

[0059] Transmission controller 70 includes a brake control unit 71 and an accelerator control unit 72. Brake control unit 71 outputs a command signal for control of activation of the brake to brake EPC 141. Accelerator control unit 72 outputs a command signal for control of the vehicle speed to HMT 144.

[0060] Work implement controller 80 includes a steering control unit 81 and a work implement control unit 82. Steering control unit 81 outputs a command signal for control of the travel direction of wheel loader 1 to steering EPC 142. Work implement control unit 82 outputs a command signal for control of operations of work implement 3 to work implement EPC 143.

[0061] Automation controller 100 includes a position estimator 101, a path planning unit 102, and a path tracking control unit 103.

[0062] Position estimator 101 estimates an own position of wheel loader 1 based on the positional information obtained by positional information obtaining device 112. Position estimator 101 recognizes a target position based on the external information obtained by perception device 111. The target position is, for example, a position of excavation target 310 or dump truck 300 shown in Fig. 3. Position estimator 101 can obtain a prescribed reference point of dump truck 300, such as a position of an upper end of a side surface of vessel 301. Perception device 111 may recognize the target position and input the target position to automation controller 100, or position estimator 101 may recognize the target position based on a result of detection by perception device 111.

[0063] Path planning unit 102 generates an optimal path of wheel loader 1 in automatic control of wheel loader 1. The optimal path includes a path for travel by travel apparatus 4 and a path for operations of work implement 3. For example, path planning unit 102 generates an optimal path of wheel loader 1 that performs loaded forward travel toward dump truck 300 and an optimal path of wheel loader 1 that moves away from dump truck 300 in unloaded rearward travel, in the loading work for loading onto dump truck 300. Path planning unit 102 generates an optimal path that connects a current own position of wheel loader 1 to a target position to which wheel loader 1 is headed from now, while the loading work for loading onto dump truck 300 is performed.

[0064] A path for travel by travel apparatus 4 included in the optimal path may be generated based on an actual travel record based on the operation by the operator.

Alternatively, the path for travel may be a travel path obtained by computation.

[0065] Path tracking control unit 103 controls the accelerator, the brake, and steering such that wheel loader 1 travels as following the optimal path generated by path planning unit 102. Path tracking control unit 103 outputs a command signal for travel of wheel loader 1 along the optimal path to brake control unit 71, accelerator control unit 72, and steering control unit 81. Path tracking control unit 103 controls boom cylinder 16 and bucket cylinder 19 such that work implement 3 operates along the optimal path generated by path planning unit 102. Path tracking control unit 103 outputs a command signal for movement of work implement 3 along the optimal path to work implement control unit 82.

[0066] An interface 130 is configured to transmit and receive a signal to and from vehicular body controller 50. Interface 130 includes a mode selection operation portion 131, an engine emergency stop switch 132, and a mode indicator 133.

[0067] Mode selection operation portion 131 is operated by the operator. The operator selects an operation mode of wheel loader 1 by operating mode selection operation portion 131. The operation mode of wheel loader 1 includes a manual mode in which wheel loader 1 is manually operated and an auto mode in which wheel loader 1 is automatically controlled. The operation mode includes a record & edition mode in which an actual work based on the operation by the operator is recorded and a parameter recorded during the work is edited in order to generate the optimal path in automatic control of wheel loader 1.

[0068] While the manual mode is selected, works are performed by the operation by the operator. While the auto mode is selected, wheel loader 1 is automatically controlled to perform works. When the operator operates wheel loader 1 to perform works with the record & edition mode having been selected, those works are recorded, a feature point in the trace of work implement 3 during those works is extracted, and the position and the posture of work implement 3 at each feature point are determined. A path that sequentially follows feature points is generated, and this generated path is defined as a path for operations of work implement 3 under automatic control of wheel loader 1.

[0069] Engine emergency stop switch 132 is operated by the operator. When an event that requires emergency stop of engine 21 occurs, the operator operates engine emergency stop switch 132. A signal resulting from an operation onto mode selection operation portion 131 and engine emergency stop switch 132 is inputted to vehicular body controller 50.

[0070] Mode indicator 133 indicates whether wheel loader 1 is currently in the manual mode in which the manual operation by the operator is performed, the auto mode in which the wheel loader is automatically controlled, or the record & edition mode. Vehicular body controller 50 outputs a command signal for control of turn-on of the indicator to mode indicator 133.

<Records of Works (Records) by Skilled Operator>

[0071] Fig. 5 is a flowchart showing a flow of processing for recording work implement control when the skilled operator performs loading works for loading of loads in bucket 6 into vessel 301 of dump truck 300.

[0072] Initially, as advance preparation, before start of the loading work, in step S100, the operator selects the operation mode of wheel loader 1. The operator operates mode selection operation portion 131 to select the record & edition mode. The operation onto mode selection operation portion 131 may be an operation onto a button or an operation onto a monitor.

[0073] In step S101, a shape of vessel 301 of dump truck 300 which is a container into which loads are to be loaded is recognized. For example, the shape of dump truck 300 is obtained by LiDAR which is perception device 111. Point group data indicating three-dimensional coordinate values of measurement points on dump truck 300 is obtained by irradiating dump truck 300 with laser beams from LiDAR. Dump truck 300 is sensed from four directions of the fore direction, the aft direction, the right direction, and the left direction, and the shape of vessel 301 can be recognized based on information on a point group. The recognized shape of vessel 301 is inputted to automation controller 100.

[0074] In step S102, perception device 111 recognizes a reference point P of vessel 301 of dump truck 300. Dump truck 300 is detected by LiDAR which is perception device 111. Automation controller 100 recognizes the position of vessel 301 based on comparison between the point group detected by perception device 111 and a master point group representing the shape of vessel 301. Automation controller 100 sets as reference point P, an upper end of a side surface of vessel 301 of dump truck 300 recognized by LiDAR which is perception device 111.

[0075] In generation of the travel path based on the actual travel record based on operations by the operator, reference point P is determined based on a position at the time when loading is performed. In this case, perception device 111 detects a loading position at the position of vessel 301 in the loading work and obtains reference point P based on the loading position.

[0076] After processing in steps S101 and S102, in step S103, the operator who is in wheel loader 1 performs an operation to load loads in bucket 6 into vessel 301. As described with reference to Fig. 3 (C) and (D), the operator controls wheel loader 1 where loads are carried in work implement 3 (bucket 6) to travel forward toward vessel 301. The operator operates work implement 3 (boom 14 and bucket 6) at appropriate timing, and switches a travel direction of wheel loader 1 from forward travel to rearward travel at appropriate timing. The operator thus has the loads carried in work implement 3 (bucket 6) loaded into bucket 301.

[0077] Fig. 6 is a diagram showing a trace of work

implement 3 when the skilled operator performs loading into vessel 301. Fig. 6 and subsequent Figs. 9 to 14 schematically show vessel 301 viewed from the fore/aft direction of dump truck 300, and schematically show a part on a front side of wheel loader 1 that approaches vessel 301 from the left side or the right side of dump truck 300.

[0078] A trace TR shown in Fig. 6 is a trace followed by cutting edge 6a of bucket 6 during a period from a time point when wheel loader 1 starts forward travel (dump approach) toward dump truck 300 for loading loads in bucket 6 into vessel 301 until wheel loader 1 moves away from dump truck 300 after it ejects the loads in bucket 6 into vessel 301.

[0079] As shown in Fig. 6, an xy coordinate system with reference point P being defined as an origin is set. An x axis represents the lateral direction of dump truck 300 that passes through reference point P. A direction away from vessel 301 with reference point P being defined as the reference is defined as a +x direction. A y axis represents the upward/downward direction that passes through reference point P. An upward direction from reference point P is defined as a +y direction.

[0080] A bucket angle θ shown in Fig. 6 represents an angle formed between the ground and rear surface 6b of bucket 6. Bucket angle θ may be an angle formed between rear surface 6b of bucket 6 and a horizontal plane with the vehicular body being defined as the reference.

[0081] In step S104, automation controller 100 recognizes the current position of cutting edge 6a of bucket 6. Positional information obtaining device 112 obtains the current position of the vehicular body of wheel loader 1 and obtains the posture of the work implement with respect to the vehicular body with boom angle sensor 123 and bucket angle sensor 124, to thereby recognize the current position of cutting edge 6a of bucket 6 in the global coordinate system. The position of cutting edge 6a of bucket 6 relative to vessel 301 of dump truck 300 can be calculated based on the current positions of wheel loader 1 and work implement 3 and the current position of dump truck 300 in the global coordinate system.

[0082] Alternatively, perception device 111 may be used to obtain the direction and the distance of reference point P of vessel 301 of dump truck 300 from a position of arrangement of perception device 111, to thereby calculate the current position of cutting edge 6a of bucket 6 relative to reference point P. This relative position may be recognized as the current position.

[0083] In step S105, path planning unit 102 of automation controller 100 records a parameter while the operator performs the loading operation for loading into vessel 301. The recorded parameter includes horizontal and vertical positions with reference point P being defined as the reference, that is, an x coordinate and a y coordinate, of cutting edge 6a of bucket 6. The parameter includes bucket angle θ. Path planning unit 102 can calculate bucket angle θ based on results of detection by boom angle sensor 123 and bucket angle sensor 124 attached to work implement 3.

[0084] The current position of cutting edge 6a of bucket 6 and bucket angle θ while the operator is performing the loading operation for loading into vessel 301 are recorded. The posture of work implement 3 while the operator is performing the loading operation for loading into vessel 301 is recorded based on the current position of cutting edge 6a of bucket 6 and bucket angle θ.

[0085] In step S106, automation controller 100 determines whether or not the loading operation has ended. For example, the fact that loads in bucket 6 are fully ejected into vessel 301 and bucket 6 is empty can be recognized based on a result of detection by boom cylinder pressure sensor 125. When movement of the current position of cutting edge 6a of bucket 6 to a position distant from dump truck 300 while bucket 6 is empty is recognized, determination that the loading operation has ended can be made.

[0086] When it is determined in step S106 that the loading operation has not ended (NO in step S106), the process returns to step S104 and recognition of the current position of cutting edge 6a of bucket 6 and recording of the parameter while the operator is performing the loading operation for loading into vessel 301 are repeated.

[0087] When it is determined in step S106 that the loading operation has ended (YES in step S106), recording of works by the skilled operator ends ("recording end" in Fig. 5).

[0088] During a period from start in step S103 until end in step S106, of the operation by the skilled operator to load the loads carried in work implement 3 (bucket 6) into vessel 301, recognition of the current position of cutting edge 6a in step S104 and recording of the parameter at the current position in step S105 are repeated. By plotting the horizontal and vertical positions with reference point P being defined as the reference, that is, the x coordinate and the y coordinate, of cutting edge 6a of bucket 6, trace TR of cutting edge 6a shown in Fig. 6 is obtained. Obtained trace TR is stored in path planning unit 102. Reference point P of vessel 301 obtained in step S102 is stored in path planning unit 102.

<Edition (Edit) of Recorded Parameter>

[0089] Fig. 7 is a flowchart showing a flow of processing for editing the parameter recorded in step S105 shown in Fig. 5, so as to be used in automatic control of the loading works.

[0090] In step S201, path planning unit 102 extracts the feature point that defines trace TR, from trace TR of work implement 3 (cutting edge 6a of bucket 6) during the loading operation shown in Fig. 6. In the present embodiment, feature points a, b, c, d, f, and g details of which will be described below are extracted.

[0091] Fig. 8 shows a graph of change in cylinder length during the loading work. The abscissa in Fig. 8 represents lapse of time and extension lines are drawn at

times when cutting edge 6a passes through feature points a, b, c, d, f, and g. The ordinate in Fig. 8 represents the lengths of boom cylinder 16 and bucket cylinder 19.

[0092] A position of cutting edge 6a of bucket 6 at the time when wheel loader 1 starts the operation of bucket 6 in the dump direction for loading the loads in bucket 6 into vessel 301 while wheel loader 1 is traveling forward toward dump truck 300 is extracted as feature point a. Fig. 9 is a diagram schematically showing the posture of wheel loader 1 when the dump operation of bucket 6 is started. Feature point a is a position through which cutting edge 6a of bucket 6 passes during forward travel of wheel loader 1 toward dump truck 300. Feature point a is more distant from vessel 301 than reference point P. Feature point a is located in front of reference point P of vessel 301. Feature point a is located at a position higher than reference point P of vessel 301.

[0093] As shown in Fig. 8 and Figs. 6 and 9, before cutting edge 6a reaches feature point a, wheel loader 1 is traveling forward. The length of boom cylinder 16 increases, and hence boom 14 is being raised. The length of bucket cylinder 19 is constant, and hence the posture of bucket 6 is constant. Bucket 6 is in a tilted state with the excavation target having been carried therein. Bucket 6 is in a posture in which it can transport loads therein in a stable manner.

[0094] A position of cutting edge 6a of bucket 6 at the time when wheel loader 1 travels forward to approach vessel 301 and cutting edge 6a of bucket 6 moves toward a farthest side (the left side in Figs. 9 to 14) is extracted as feature point b. Fig. 10 is a diagram schematically showing the posture of wheel loader 1 when cutting edge 6a reaches the farthest position. Feature point b is a position where cutting edge 6a of bucket 6 passes after it passes through feature point a and moves beyond reference point P. Feature point b is located above vessel 301.

[0095] As shown in Fig. 8 and Figs. 9 and 10, wheel loader 1 continues forward travel until cutting edge 6a reaches feature point b after it passes through feature point a. The length of boom cylinder 16 keeps increasing, and hence boom 14 keeps rising. At the time point when cutting edge 6a reaches feature point a, the operation of bucket 6 in the dump direction is started, and bucket 6 continues operating in the dump direction until the cutting edge reaches feature point b. The length of bucket cylinder 19 keeps decreasing. In movement of cutting edge 6a from feature point a to feature point b, the dump operation of bucket 6 affects the position of cutting edge 6a more greatly than rise of boom 14. Therefore, feature point b is lower in height position than feature point a. A value of the y coordinate of feature point b is smaller than the value of a y coordinate of feature point a.

[0096] As shown in Fig. 8, after cutting edge 6a reaches feature point a, a rate of rise of boom 14 decreases. The operation to raise boom 14 becomes gentle. Before cutting edge 6a reaches feature point b, the rate of rise of boom 14 again increases.

[0097] A position of cutting edge 6a of bucket 6 at the time when the operation of bucket 6 in the dump direction is stopped above vessel 301 is extracted as feature point c. Fig. 11 is a diagram schematically showing the posture of wheel loader 1 when the dump operation of bucket 6 is stopped. Feature point c is a position where cutting edge 6a of bucket 6 passes after it passes through feature point b. The operation of bucket 6 in the dump direction is continued during a period from passage of cutting edge 6a of bucket 6 through feature point a until cutting edge 6a reaches feature point c. While cutting edge 6a of bucket 6 is located at feature point c, bucket 6 is in a full dump state. While cutting edge 6a of bucket 6 is located at feature point c, the length of bucket cylinder 19 is minimized. Feature point c is located at a position closer to reference point P than feature point b.

[0098] As shown in Fig. 8 and Figs. 10 and 11, wheel loader 1 continues forward travel until cutting edge 6a reaches feature point c after it passes through feature point b. The length of boom cylinder 16 keeps increasing, and hence boom 14 keeps rising. The length of bucket cylinder 19 keeps decreasing, and hence bucket 6 continues operating in the dump direction. At a time point when cutting edge 6a reaches feature point c, bucket 6 is in a full dump posture and the dump operation of bucket 6 is stopped. At the time point when cutting edge 6a reaches feature point c, the length of bucket cylinder 19 is minimized. In movement of cutting edge 6a from feature point b to feature point c, the dump operation of bucket 6 affects the position of cutting edge 6a more greatly than rise of boom 14. Therefore, feature point c is lower in height position than feature point b. The value of the y coordinate of feature point c is smaller than the value of the y coordinate of feature point b.

[0099] During the dump operation of bucket 6, boom 14 keeps rising. During soil ejection from bucket 6, boom 14 keeps rising. During loading of loads into dump truck 300, boom 14 keeps rising. During the dump operation of bucket 6, wheel loader 1 moves toward vessel 301 of dump truck 300, and hence it also continues forward travel.

[0100] A position of cutting edge 6a of bucket 6 at the time when the operation to raise boom 14 is stopped above vessel 301 is extracted as feature point d. Fig. 12 is a diagram schematically showing the posture of wheel loader 1 when the operation to raise boom 14 is stopped. Feature point d is a position where cutting edge 6a of bucket 6 passes after it passes through feature point c. In order to avoid interference with vessel 301 by work implement 3, wheel loader 1 during forward travel toward dump truck 300 is performing the operation to raise boom 14. The operation to raise boom 14 is continued during a period from start of dump approach by wheel loader 1 until cutting edge 6a of bucket 6 reaches feature point d. While cutting edge 6a of bucket 6 is located at feature point d, boom 14 is highest in height position. While cutting edge 6a of bucket 6 is located at feature point d, the length of boom cylinder 16 is maximized. Feature point d is located at a position closer to reference point P

than feature point c.

[0101] As shown in Fig. 8 and Figs. 11 and 12, at the time when cutting edge 6a passes through feature point c, wheel loader 1 is traveling forward, and at the time when cutting edge 6a passes through feature point d, wheel loader 1 is traveling rearward. While cutting edge 6a is moving between feature point c and feature point d, the travel direction of wheel loader 1 is switched from forward travel to rearward travel. The length of boom cylinder 16 keeps increasing, and hence boom 14 keeps rising. The length of bucket cylinder 19 is constant, and hence the posture of bucket 6 with respect to the vehicular body is constant. Feature point c is the position where the operation of bucket 6 in the dump direction is stopped, and while cutting edge 6a is moving from feature point c to feature point d, bucket 6 keeps the full dump posture.

[0102] At the time when boom 14 stops rising, loads in bucket 6 have already been loaded in vessel 301 and bucket 6 is in an unloaded state. Since a weight of loads in bucket 6 has become smaller, influence by inertia at the time when boom 14 is stopped is less. Therefore, vibration of the vehicular body at the time when the operation to raise boom 14 is stopped at feature point d is less likely.

[0103] In switching of the travel direction of wheel loader 1 from forward travel to rearward travel, the center of gravity varies in the fore direction. In decrease of rise of boom 14, the center of gravity of the loads in bucket 6 moves. By thus smoothly moving the loads in bucket 6 into vessel 301, a time period required for the loading work can be reduced and a cycle time of the loading work can be reduced.

[0104] A position of cutting edge 6a of bucket 6 at the time when the operation of bucket 6 in the tilt direction is started above vessel 301 is extracted as feature point f. Fig. 13 is a diagram schematically showing the posture of wheel loader 1 when the tilt operation of bucket 6 is started. Feature point f is a position through which cutting edge 6a of bucket 6 passes after it passes through feature point d. Bucket 6 maintains the full dump state during a period from passage of cutting edge 6a of bucket 6 through feature point c until the cutting edge reaches feature point f. Feature point f is set to be closer to reference point P than feature point d. The length of boom cylinder 16 is constant and boom 14 is maintained at an uppermost position during a period from passage of cutting edge 6a of bucket 6 through feature point d until the cutting edge reaches feature point f.

[0105] As shown in Fig. 8 and Figs. 12 and 13, until cutting edge 6a reaches feature point f after it passes through feature point d, wheel loader 1 continues rearward travel. The length of boom cylinder 16 is constant, and therefore the posture of boom 14 with respect to the vehicular body is constant. At this time, the height position of boom 14 is highest. At the time when boom 14 stops rising, loads in bucket 6 have already been loaded in vessel 301 and bucket 6 is in an unloaded state. The length of bucket cylinder 19 is constant, and therefore the posture of bucket 6 with respect to the vehicular body is constant. While cutting edge 6a is moving from feature point d to feature point f, wheel loader 1 is traveling rearward with the full dump state of bucket 6 being maintained.

[0106] A position of cutting edge 6a of bucket 6 at the time when the operation of bucket 6 in the tilt direction is stopped is extracted as feature point g. Fig. 14 is a diagram schematically showing the posture of wheel loader 1 when the tilt operation of bucket 6 is stopped. Feature point g is a position through which cutting edge 6a of bucket 6 passes after it passes through feature point f. The operation of bucket 6 in the tilt direction is continued during a period from passage of cutting edge 6a of bucket 6 through feature point f until the cutting edge reaches feature point g. Feature point g is located above reference point P. Boom 14 is maintained at the uppermost position during a period from passage of cutting edge 6a of bucket 6 through feature point d until the cutting edge reaches feature point g.

[0107] As shown in Fig. 8 and Figs. 13 and 14, until cutting edge 6a reaches feature point g after it passes through feature point f, wheel loader 1 continues rearward travel. The length of boom cylinder 16 is constant, and therefore the posture of boom 14 with respect to the vehicular body is constant. At the time point when cutting edge 6a reaches feature point f, the operation of bucket 6 in the tilt direction is started, and bucket 6 keeps operating in the tilt direction until the cutting edge reaches feature point g. The length of bucket cylinder 19 keeps increasing. At the time point when cutting edge 6a reaches feature point g, the operation of bucket 6 in the tilt direction is stopped. Feature point f is the position where the tilt operation of bucket 6 is started. Feature point g is the position where the tilt operation of bucket 6 is stopped. While cutting edge 6a is moving from feature point f to feature point g, wheel loader 1 is traveling rearward with bucket 6 performing the tilt operation. Wheel loader 1 performs the loading work for loading into dump truck 300, and thereafter performs the tilt operation of bucket 6 during rearward travel to move away from dump truck 300.

[0108] During the tilt operation of bucket 6, the posture of boom 14 is kept constant. After completion of ejection of loads from bucket 6, boom 14 is held and the tilt operation of bucket 6 is performed. During this tilt operation of bucket 6, wheel loader 1 continues rearward travel and travels in the direction away from vessel 301 of dump truck 300.

[0109] As shown in Fig. 8, after cutting edge 6a passes through feature point g, wheel loader 1 continues rearward travel. The length of boom cylinder 16 has decreased, and hence boom 14 has been lowered. The length of bucket cylinder 19 is constant, and therefore the posture of bucket 6 with respect to the vehicular body is constant.

[0110] Referring back to Fig. 7, in step S202, path planning unit 102 determines the position and the posture

of work implement 3 with respect to reference point P based on the recorded parameter at each of extracted feature points a, b, c, d, f, and g. In path planning unit 102, the horizontal and vertical positions with reference point P being defined as the reference, that is, the x coordinate and the y coordinate, of cutting edge 6a of bucket 6, and bucket angle θ when cutting edge 6a of bucket 6 follows trace TR, are stored. The posture of work implement 3 while cutting edge 6a of bucket 6 is located at each point on trace TR is stored in path planning unit 102.

[0111] The position of work implement 3 at each of feature points a, b, c, d, f, and g is determined by giving the x coordinate and the y coordinate of cutting edge 6a of bucket 6. The posture of work implement 3 at the time when cutting edge 6a of bucket 6 is located at each of feature points a, b, c, d, f, and g is determined based on the x coordinate and the y coordinate of each of feature points a, b, c, d, f, and g and bucket angle θ at each of feature points a, b, c, d, f, and g.

[0112] Feature point a is located at a position where a height position of cutting edge 6a is highest (the y coordinate having a maximum value) during the loading work. Feature point c is located at a position where the height position of cutting edge 6a is lowest (the y coordinate having a minimum value) during ejection of loads in bucket 6. The y coordinate of feature point a has a positive value. The y coordinate of feature point c has a negative value. The y coordinates of feature points d, f, and g have positive values.

[0113] The x coordinate of feature point a has a positive value. The x coordinates of feature points b, c, d, and f have negative values. Feature point b is located at a position where the x coordinate has the minimum value during ejection of loads in bucket 6. The x coordinate of feature point g is zero. Feature point g is located directly above reference point P.

[0114] In step S203, path planning unit 102 defines the posture of work implement 3 at each of feature points a, b, c, d, f, and g with lengths of boom cylinder 16 and bucket cylinder 19. The lengths of boom cylinder 16 and bucket cylinder 19 are uniquely determined based on the x coordinate and the y coordinate of the feature point and bucket angle θ. Path planning unit 102 determines the length of boom cylinder 16 and the length of bucket cylinder 19 at the time when cutting edge 6a of bucket 6 is located at each of feature points a, b, c, d, f, and g. Path planning unit 102 generates a path along which cutting edge 6a of bucket 6 sequentially follows feature point a, feature point b, feature point c, feature point d, feature point f, and feature point g and defines this path as the path for operations of work implement 3 included in the optimal path. Then, the process ends ("edition end" in Fig. 7).

<Automatic Control (Play) of Loading Work>

[0115] Fig. 15 is a flowchart showing a flow of processing for loading loads carried in bucket 6 into vessel 301 under automatic control.

[0116] In step S301, automation controller 100 recognizes the current positions of wheel loader 1 and work implement 3. Positional information obtaining device 112 obtains the current position of the vehicular body of wheel loader 1 and obtains the posture of the work implement with respect to the vehicular body with boom angle sensor 123 and bucket angle sensor 124, to thereby recognize the current positions of wheel loader 1 and work implement 3 in the global coordinate system. The position of cutting edge 6a of bucket 6 relative to vessel 301 of dump truck 300 can be calculated based on the current positions of wheel loader 1 and work implement 3 and the current position of dump truck 300 in the global coordinate system.

[0117] Alternatively, perception device 111 may be used to obtain the direction and the distance of reference point P of vessel 301 of dump truck 300 from a position of arrangement of perception device 111, to thereby calculate the current position of cutting edge 6a of bucket 6 relative to reference point P.

[0118] At which position with respect to each of feature points a, b, c, d, f, and g cutting edge 6a of bucket 6 is located is recognized based on the current position of work implement 3. For example, cutting edge 6a is recognized as not having reached feature point a yet, cutting edge 6a is recognized as having passed through feature point a and being located between feature point a and feature point b, cutting edge 6a is recognized as having passed through feature point b and being located between feature point b and feature point c, etc. Furthermore, a feature point to which cutting edge 6a is headed next is recognized as the target position. For example, when cutting edge 6a has not yet reached feature point a, feature point a is recognized as the target position, when cutting edge 6a is located between feature point a and feature point b, feature point b is recognized as the target position, etc.

[0119] In step S302, automation controller 100 recognizes the length of boom cylinder 16 and the length of bucket cylinder 19 at the current position. Boom angle sensor 123 detects the angle of boom 14. Bucket angle sensor 124 detects the angle of bucket 6. The posture of work implement 3 is determined by the angle of boom 14 and the angle of bucket 6. The length of boom cylinder 16 and the length of bucket cylinder 19 at the current position are recognized based on the posture of work implement 3.

[0120] Instead of or in addition to boom angle sensor 123 and bucket angle sensor 124, an angle sensor that detects an angle of bell crank 18 and an angle sensor that detects an angle of link 15 may be provided. A stroke sensor that detects a length of a cylinder stroke may be provided in boom cylinder 16 and bucket cylinder 19.

[0121] In step S303, automation controller 100 calculates a difference between the length of boom cylinder 16 and the length of bucket cylinder 19 at the current position recognized in step S302 and the length of boom cylinder

16 and the length of bucket cylinder 19 (which will be referred to as a target cylinder length below) at the target position to which cutting edge 6a is headed next. Automation controller 100 calculates how much the cylinder is to be moved until cutting edge 6a reaches the next target position.

[0122] In step S304, automation controller 100 refers to a current vehicle speed and determines a target cylinder stroke speed that achieves the target cylinder length at the time when cutting edge 6a reaches the target position to which the cutting edge is headed next. Automation controller 100 controls boom cylinder 16 and bucket cylinder 19 such that work implement 3 takes, when cutting edge 6a reaches the target position to which it is headed next, a posture corresponding to that target position. The current vehicle speed is obtained by vehicle speed sensor 122. Time until the cutting edge reaches the next target position can be calculated based on the current position of cutting edge 6a and the current vehicle speed. The target cylinder stroke speed can be determined by dividing the difference in cylinder length calculated in step S303 by time until the cutting edge reaches the next target position.

[0123] An amount of cylinder stroke while wheel loader 1 travels a unit distance may be determined. Travel of the unit distance by wheel loader 1 may be determined based on the vehicle speed or may be sensed by perception device 111.

[0124] **In** step S305, automation controller 100 outputs a command current corresponding to the target cylinder stroke speed to vehicular body controller 50. Automation controller 100 outputs a command to extend and contract boom cylinder 16 and bucket cylinder 19 at the target cylinder stroke speed to work implement control unit 82 of work implement controller 80. The command to extend and contract boom cylinder 16 and bucket cylinder 19 at the target cylinder stroke speed is outputted from work implement control unit 82 to work implement EPC 143.

[0125] **In** step S306, as work implement EPC 143 that has received the command signal adjusts an opening, appropriate hydraulic oil is supplied to boom cylinder 16 and bucket cylinder 19. Boom cylinder 16 and bucket cylinder 19 thus operate.

[0126] **In** step S307, automation controller 100 recognizes the current lengths of boom cylinder 16 and bucket cylinder 19 as in step S302. Automation controller 100 determines whether or not the current lengths of boom cylinder 16 and bucket cylinder 19 have reached the target cylinder lengths.

[0127] When determination as having reached the target cylinder length is made in determination in step S307 (YES in step S307), the process proceeds to step S308 and automation controller 100 determines whether or not there is a next target position.

[0128] When determination as not having reached the target cylinder length is made in determination in step S307 (NO in step S307) and when it is determined in step S308 that there is a next target position (YES in step S308), the process returns to step S301 and processing for extending and contracting boom cylinder 16 and bucket cylinder 19 based on the current position of work implement 3 is repeated. The cylinder speed is successively changed in accordance with the current position of cutting edge 6a of bucket 6. When the current position of cutting edge 6a is displaced from a position based on the cylinder speed set in previous processing, the cylinder speed is adjusted.

[0129] When it is determined in step S308 that there is no next target position (NO in step S308), the loading work ends ("play end" in Fig. 15), which corresponds to a case where the next target position after cutting edge 6a passes through feature point g is not set in the present embodiment.

[0130] By moving cutting edge 6a of bucket 6 as sequentially passing through feature point a, feature point b, feature point c, feature point d, feature point f, and feature point g, loads in bucket 6 can be loaded into vessel 301 without contact of bucket 6 and the vehicular body with vessel 301. By applying automatic control to thus move bucket 6 to wheel loader 1, operations of work implement 3 equivalent to operations performed by the skilled operator can be realized.

<Functions and Effects>

[0131] Characteristic features and functions and effects of the present embodiment will be summarized as below, although some description may overlap with the description above.

[0132] As shown in Figs. 5 and 6, automation controller 100 obtains reference point P of vessel 301 of dump truck 300 and obtains trace TR of cutting edge 6a of bucket 6 while wheel loader 1 is operated. As shown in Figs. 7 to 14, automation controller 100 extracts positions of feature points a, b, c, d, f, and g that define trace TR, with reference point P being defined as the reference.

[0133] Trace TR of work implement 3 while the skilled operator operates wheel loader 1 is recorded, feature points a, b, c, d, f, and g are determined based on trace TR of work implement 3, and the trace of work implement 3 in automatic control of work implement 3 is set in accordance with feature points a, b, c, d, f, and g. The trace of automatically controlled work implement 3 can thus appropriately be set, and the operation by the skilled operator can be reproduced under automatic control.

[0134] As shown in Figs. 5 and 6, automation controller 100 obtains trace TR of cutting edge 6a while the operation to load the loads carried in work implement 3 into vessel 301 is performed. By determining feature points a, b, c, d, f, and g based on trace TR of work implement 3 while the skilled operator performs the loading operation for loading into vessel 301, the loading operation by the skilled operator can be reproduced under automatic control.

[0135] As shown in Figs. 5 to 14, automation controller 100 obtains the posture of work implement 3 at feature

points a, b, c, d, f, and g. Under automatic control of work implement 3 in accordance with the positions of feature points a, b, c, d, f, and g and the posture of work implement 3 at feature points a, b, c, d, f, and g, the operation by the skilled operator can more faithfully be reproduced.

[0136] As shown in Figs. 8 and 9, feature point a is the position of cutting edge 6a at the time when the operation of bucket 6 in the dump direction is started while wheel loader 1 is traveling forward toward vessel 301. Under automatic control of wheel loader 1 such that cutting edge 6a passes through feature point a, the dump operation of bucket 6 can start at the time point before cutting edge 6a reaches vessel 301. By simultaneously performing forward travel of wheel loader 1 toward dump truck 300 and the dump operation of bucket 6 as a plurality of operations temporally overlapping, the cycle time of the loading work can be reduced.

[0137] As shown in Figs. 8 and 11, feature point c is the position of cutting edge 6a at the time when the operation of bucket 6 in the dump direction is stopped above vessel 301. Under automatic control of wheel loader 1 such that cutting edge 6a passes through feature point c, loads in bucket 6 can reliably be loaded into vessel 301.

[0138] As shown in Figs. 8 and 12, feature point d is the position of cutting edge 6a at the time when the operation to raise boom 14 is stopped above vessel 301. Under automatic control of wheel loader 1 such that cutting edge 6a passes through feature point d, the loading work can be performed without the operation of work implement 3 being stopped and sway of the vehicle by inertia at the time when boom 14 is stopped can be suppressed.

[0139] As shown in Figs. 8 and 13, feature point f is the position of cutting edge 6a at the time when the operation of bucket 6 in the tilt direction is started above vessel 301. Under automatic control of wheel loader 1 such that cutting edge 6a passes through feature point f, contact of cutting edge 6a and rear surface 6b of bucket 6 with vessel 301 can be avoided.

[0140] As shown in Figs. 8 and 14, feature point g is the position of cutting edge 6a at the time when the operation of bucket 6 in the tilt direction is stopped. Under automatic control of wheel loader 1 such that cutting edge 6a passes through feature point g, contact of bucket 6 with vessel 301 can reliably be avoided. The tilt operation to such an extent that bucket 6 can move as reliably eluding vessel 301 is performed without the tilt operation of bucket 6 more than necessary, so that bucket 6 can promptly make transition to the posture for next excavation works.

[0141] Automation controller 100 included in the automatic control system for wheel loader 1 described in the embodiment above does not necessarily have to be mounted on wheel loader 1. Such a system that a controller outside wheel loader 1 implements automation controller 100 may be configured. Vehicular body controller 50 mounted on wheel loader 1 may perform processing for transmitting information obtained by external information obtaining unit 110, vehicle information obtaining unit 120, and the like to an external controller and the external controller that receives a signal may extract the positions of feature points a, b, c, d, f, and g that define trace TR of cutting edge 6a of bucket 6 with reference point P being defined as the reference.

[0142] The external controller may be arranged at a worksite of wheel loader 1 or at a remote location distant from the worksite of wheel loader 1. The external controller may be a transportable device. The external controller may be a portable device that can be used as being carried by a worker, such as a notebook personal computer, a tablet computer, or a smartphone.

[0143] In the embodiment, works for loading loads carried in work implement 3 (bucket 6) into vessel 301, with vessel 301 of dump truck 300 being illustrated as the container, are described. The container into which loads carried in work implement 3 are to be loaded is not limited to vessel 301 of dump truck 300, and for example, a hopper may be applicable.

[0144] In the embodiment, an example in which wheel loader 1 is a manned vehicle including cab 5 on which the operator rides is described. Wheel loader 1 may be an unmanned vehicle. Wheel loader 1 does not have to include cab 5 on which the operator rides for performing operations. Wheel loader 1 does not have to be equipped with a function for manipulating by the operator who rides on the cab. Wheel loader 1 may be a work machine dedicated for remote control. Wheel loader 1 may be manipulated through a wireless signal from a remote control device.

<Additional Aspects>

[0145] The description above includes features additionally described below.

(Additional Aspect 1)

[0146] A system including a work machine includes

a work machine main body,
a work implement attached to the work machine main body, the work implement including a bucket,
a work implement posture sensor that detects a posture of the work implement,
an object sensor that detects an object around the work machine main body, and
a controller that communicates with the work implement posture sensor and the object sensor, and
the controller obtains a reference point of a container detected by the object sensor, obtains a trace of the work implement while an operation of the work machine is performed, and extracts a position of a feature point that defines the trace with the reference point being defined as a reference.

(Additional Aspect 2)

[0147] In the system according to Additional Aspect 1, the operation is an operation to load loads carried in the work implement into the container.

(Additional Aspect 3)

[0148] The system according to Additional Aspect 1 or 2 obtains a posture of the work implement at the feature point.

(Additional Aspect 4)

[0149] In the system according to any one of Additional Aspects 1 to 3,
the feature point includes a position of the work implement at time when an operation of the bucket in a dump direction is started while the work machine travels forward toward the container.

(Additional Aspect 5)

[0150] In the system according to any one of Additional Aspects 1 to 4,
the feature point includes a position of the work implement at time when an operation of the bucket in a dump direction is stopped above the container.

(Additional Aspect 6)

[0151] In the system according to any one of Additional Aspects 1 to 5,

the work implement includes a boom having a tip end attached to the bucket, and
the feature point includes a position of the work implement at time when an operation to raise the boom is stopped above the container.

(Additional Aspect 7)

[0152] In the system according to any one of Additional Aspects 1 to 6,
the feature point includes a position of the work implement at time when an operation of the bucket in a tilt direction is started above the container.

(Additional Aspect 8)

[0153] In the system according to Additional Aspect 7, the feature point includes a position of the work implement at the time when the operation of the bucket in the tilt direction is stopped

[0154] It should be understood that the embodiment disclosed herein is illustrative and non-restrictive in every respect. The scope of the present invention is defined by the terms of the claims rather than the description above and is intended to include any modifications within the scope and meaning equivalent to the terms of the claims.

REFERENCE SIGNS LIST

[0155] 1 wheel loader; 2 vehicular body frame; 2a front frame; 2b rear frame; 3 work implement; 4 travel apparatus; 4a, 4b running wheel; 5 cab; 6 bucket; 8 operation apparatus; 9 boom pin; 11 steering cylinder; 13 work implement pump; 14 boom; 15 link; 16 boom cylinder; 17 bucket pin; 18 bell crank; 18a support pin; 18b, 18c coupling pin; 19 bucket cylinder; 21 engine; 23 transmission; 25 axle; 32 main valve; 35, 36 electromagnetic proportional control valve; 41 accelerator pedal; 42 work implement control lever; 50 vehicular body controller; 51 machine monitor; 60 engine controller; 70 transmission controller; 71 brake control unit; 72 accelerator control unit; 80 work implement controller; 81 steering control unit; 82 work implement control unit; 100 automation controller; 101 position estimator; 102 path planning unit; 103 path tracking control unit; 110 external information obtaining unit; 111 perception device; 112 positional information obtaining device; 120 vehicle information obtaining unit; 121 articulation angle sensor; 122 vehicle speed sensor; 123 boom angle sensor; 124 bucket angle sensor; 125 boom cylinder pressure sensor; 130 interface; 131 mode selection operation portion; 132 engine emergency stop switch; 133 mode indicator; 140 actuator; 141 brake EPC; 142 steering EPC; 143 work implement EPC; 144 HMT.

Claims

1. A system including a work machine, the system comprising:

   a work machine main body;
   a work implement attached to the work machine main body, the work implement including a bucket;
   a work implement posture sensor that detects a posture of the work implement;
   an object sensor that detects an object around the work machine main body; and
   a controller that communicates with the work implement posture sensor and the object sensor, wherein
   the controller obtains a reference point of a container detected by the object sensor, obtains a trace of the work implement while an operation of the work machine is performed, and extracts a position of a feature point that defines the trace with the reference point being defined as a reference.

2. The system according to claim 1, wherein
   the operation is an operation to load loads carried in

the work implement into the container.

3. The system according to claim 1 or 2, the system obtaining a posture of the work implement at the feature point.

4. The system according to claim 1 or 2, wherein
the feature point includes a position of the work implement at time when an operation of the bucket in a dump direction is started while the work machine travels forward toward the container.

5. The system according to claim 1 or 2, wherein
the feature point includes a position of the work implement at time when an operation of the bucket in a dump direction is stopped above the container.

6. The system according to claim 1 or 2, wherein

the work implement includes a boom having a tip end attached to the bucket, and
the feature point includes a position of the work implement at time when an operation to raise the boom is stopped above the container.

7. The system according to claim 1 or 2, wherein
the feature point includes a position of the work implement at time when an operation of the bucket in a tilt direction is started above the container.

8. The system according to claim 7, wherein
the feature point includes a position of the work implement at the time when the operation of the bucket in the tilt direction is stopped.

9. A work machine controller,

obtaining a reference point of a container detected by an object sensor;
obtaining a trace of a work implement while the work machine is operated; and
extracting a position of a feature point that defines the trace with the reference point being defined as a reference.

10. A method of controlling a work machine, the method comprising:

obtaining a reference point of a container detected by an object sensor;
obtaining a trace of a work implement while the work machine is operated; and
extracting a position of a feature point that defines the trace with the reference point being defined as a reference.

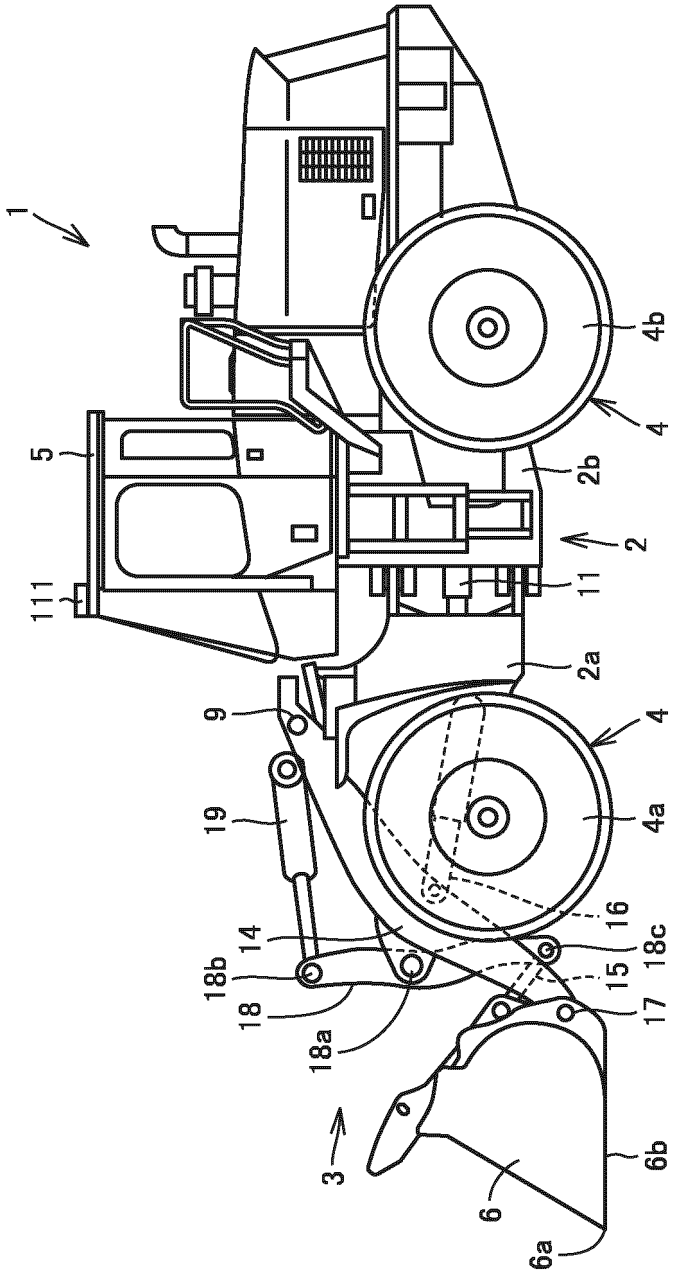

FIG.1

FIG.2

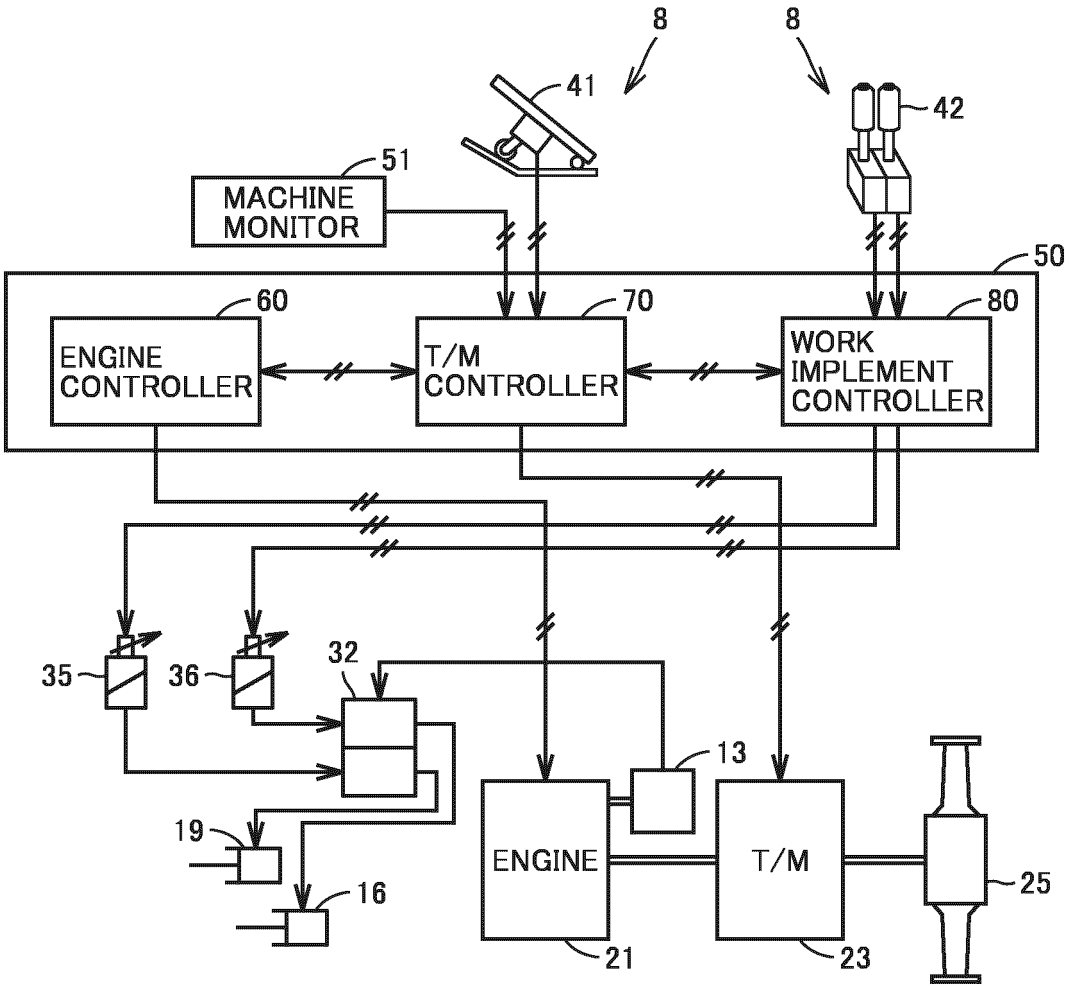
8
8
41
42
51
MACHINE MONITOR
50
60
70
80
ENGINE CONTROLLER
T/M CONTROLLER
WORK IMPLEMENT CONTROLLER
35
36
32
13
19
16
ENGINE
T/M
25
21
23

FIG.3

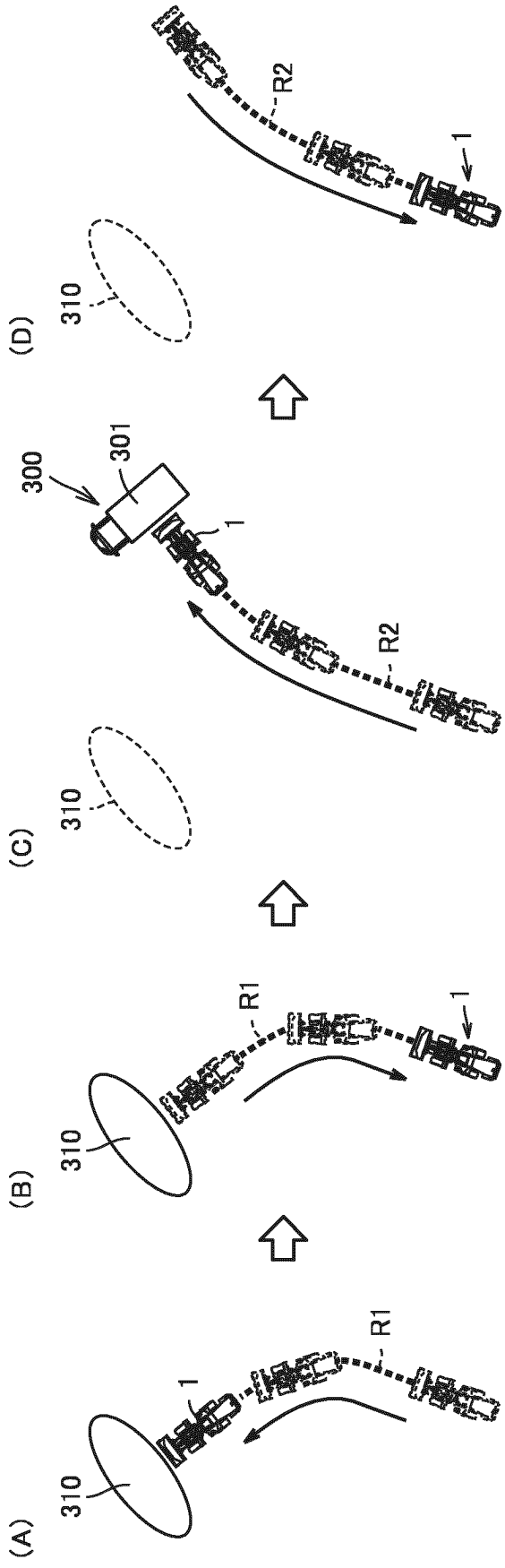

FIG.4

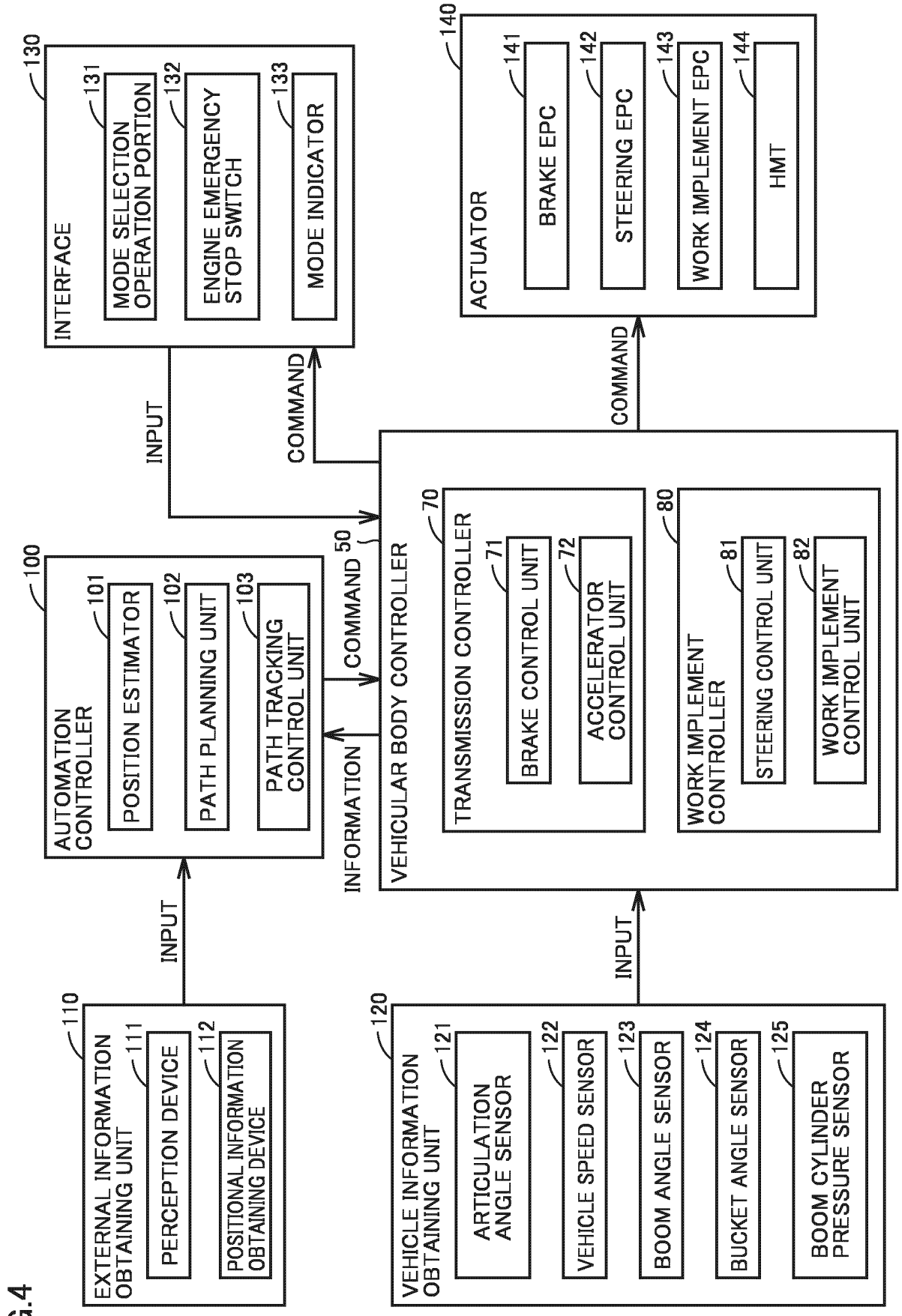
130
INTERFACE
131
MODE SELECTION OPERATION PORTION
132
ENGINE EMERGENCY STOP SWITCH
133
MODE INDICATOR
140
ACTUATOR
141
BRAKE EPC
142
STEERING EPC
143
WORK IMPLEMENT EPC
144
HMT
INPUT
COMMAND
COMMAND
100
AUTOMATION CONTROLLER
101
POSITION ESTIMATOR
102
PATH PLANNING UNIT
103
PATH TRACKING CONTROL UNIT
COMMAND
INFORMATION
50
VEHICULAR BODY CONTROLLER
70
TRANSMISSION CONTROLLER
71
BRAKE CONTROL UNIT
72
ACCELERATOR CONTROL UNIT
80
WORK IMPLEMENT CONTROLLER
81
STEERING CONTROL UNIT
82
WORK IMPLEMENT CONTROL UNIT
INPUT
INPUT
110
EXTERNAL INFORMATION OBTAINING UNIT
111
PERCEPTION DEVICE
112
POSITIONAL INFORMATION OBTAINING DEVICE
120
VEHICLE INFORMATION OBTAINING UNIT
121
ARTICULATION ANGLE SENSOR
122
VEHICLE SPEED SENSOR
123
BOOM ANGLE SENSOR
124
BUCKET ANGLE SENSOR
125
BOOM CYLINDER PRESSURE SENSOR

FIG.5

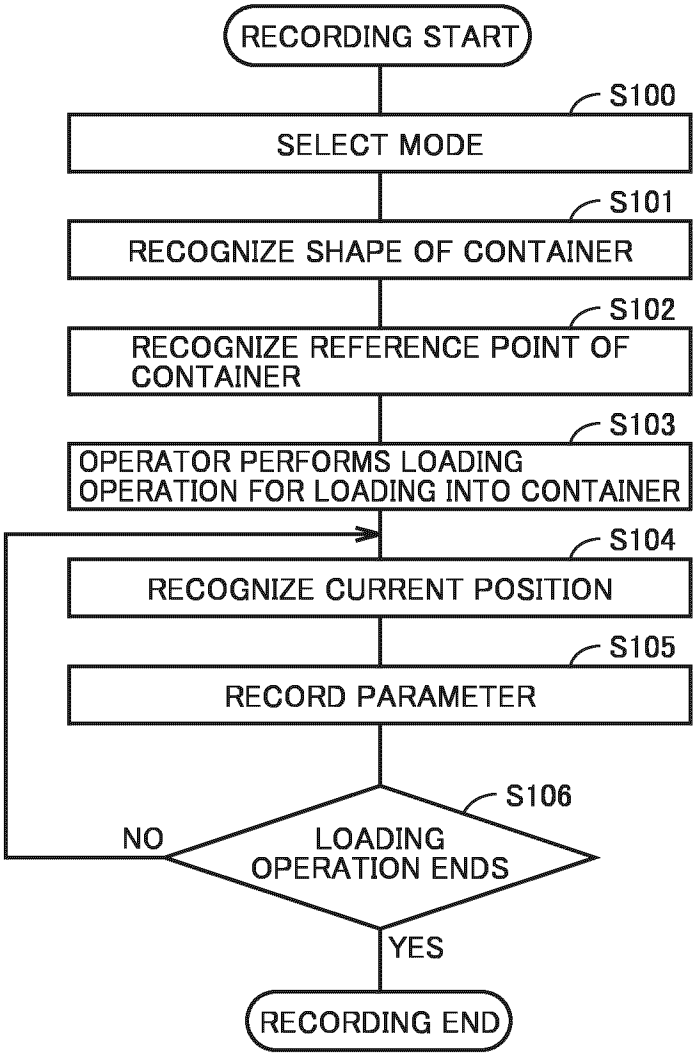
RECORDING START
S100
SELECT MODE
S101
RECOGNIZE SHAPE OF CONTAINER
S102
RECOGNIZE REFERENCE POINT OF CONTAINER
S103
OPERATOR PERFORMS LOADING OPERATION FOR LOADING INTO CONTAINER
S104
RECOGNIZE CURRENT POSITION
S105
RECORD PARAMETER
S106
NO
LOADING OPERATION ENDS
YES
RECORDING END

FIG.6

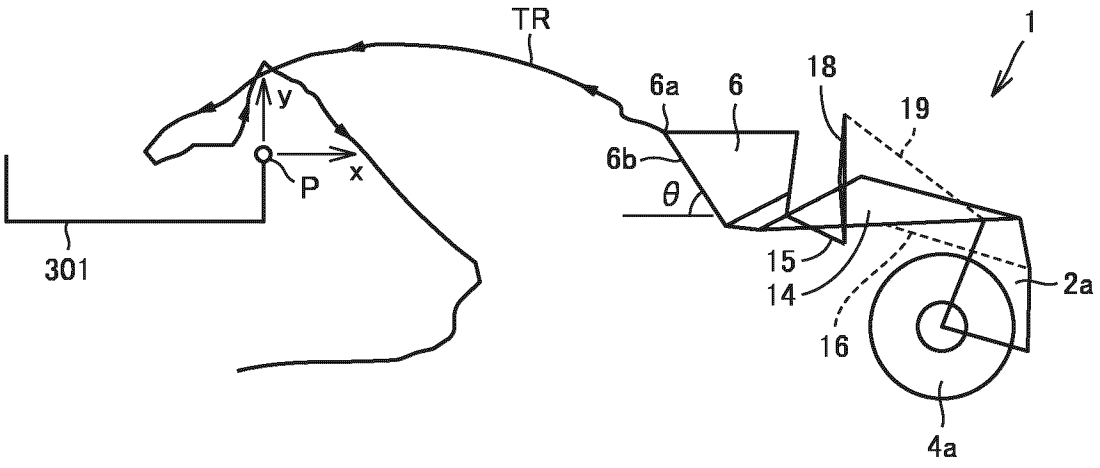
TR
1
18
19
6a
6
6b
θ
y
x
P
301
15
14
16
2a
4a

FIG.7

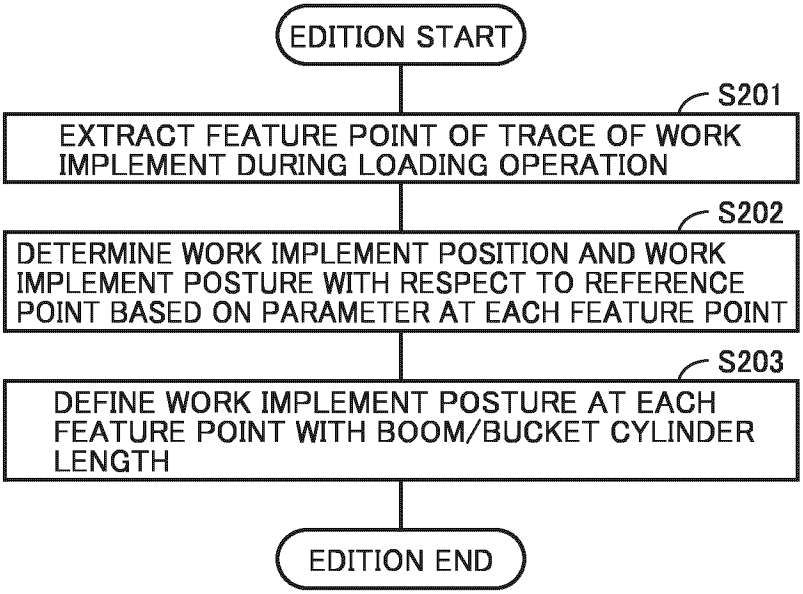
EDITION START
S201
EXTRACT FEATURE POINT OF TRACE OF WORK IMPLEMENT DURING LOADING OPERATION
S202
DETERMINE WORK IMPLEMENT POSITION AND WORK IMPLEMENT POSTURE WITH RESPECT TO REFERENCE POINT BASED ON PARAMETER AT EACH FEATURE POINT
S203
DEFINE WORK IMPLEMENT POSTURE AT EACH FEATURE POINT WITH BOOM/BUCKET CYLINDER LENGTH
EDITION END

FIG.8

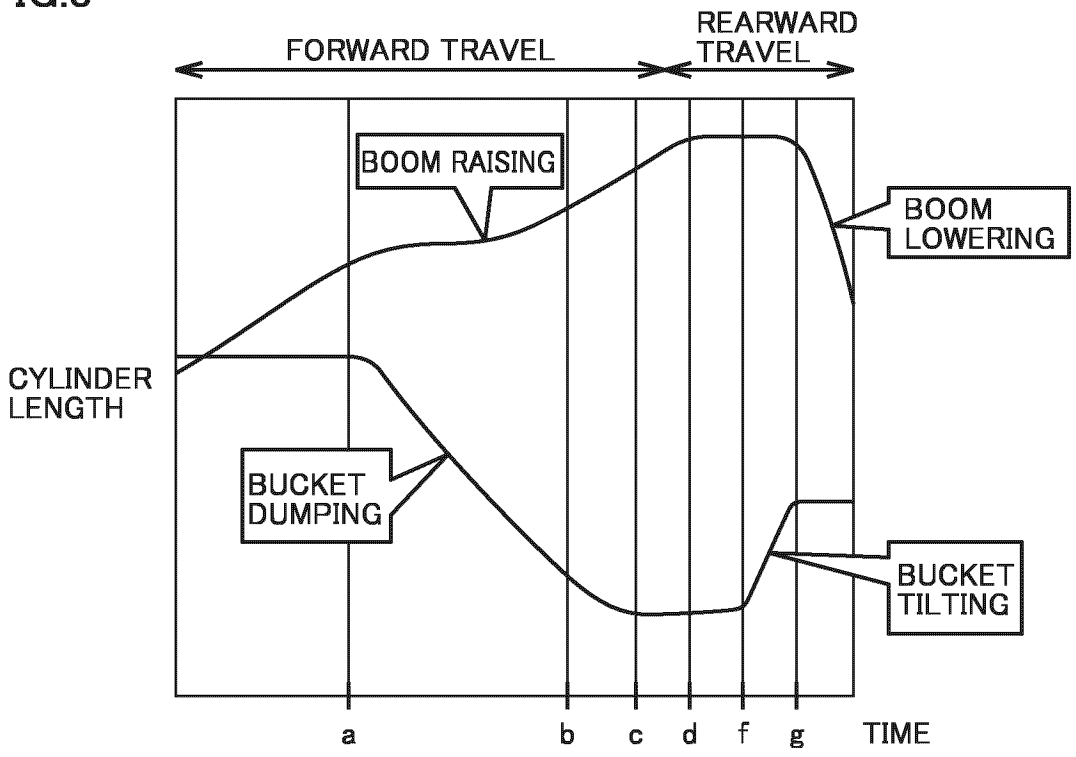
FORWARD TRAVEL
REARWARD TRAVEL
BOOM RAISING
BOOM LOWERING
CYLINDER LENGTH
BUCKET DUMPING
BUCKET TILTING
a
b
c
d
f
g
TIME

FIG.9

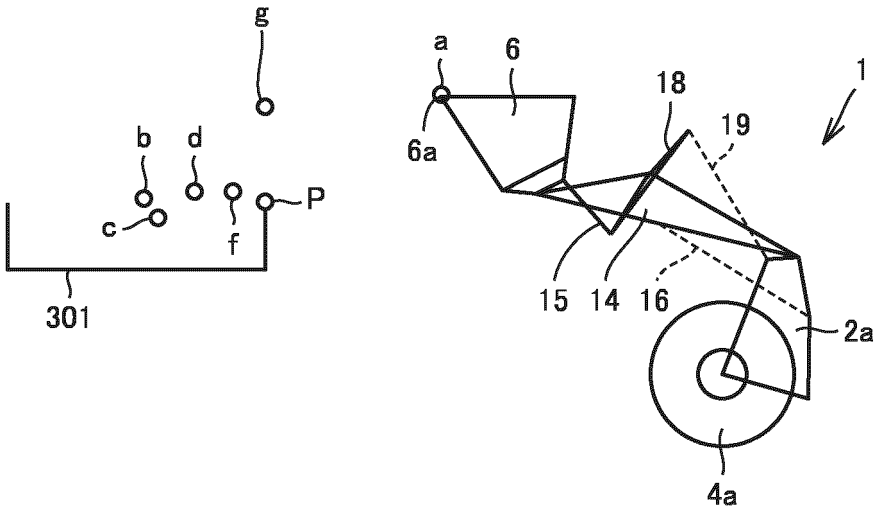
g
b
d
P
c
f
301
a
6
18
1
6a
19
15
14
16
2a
4a

FIG.10

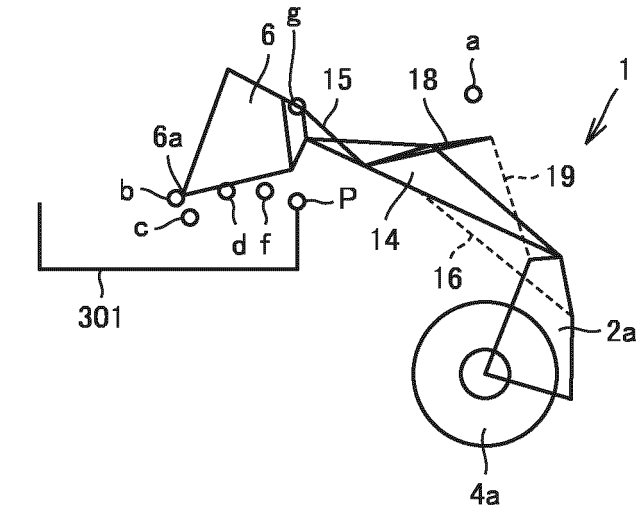
6
g
15
18
a
1
6a
19
b
P
c
d
f
14
16
301
2a
4a

FIG.11

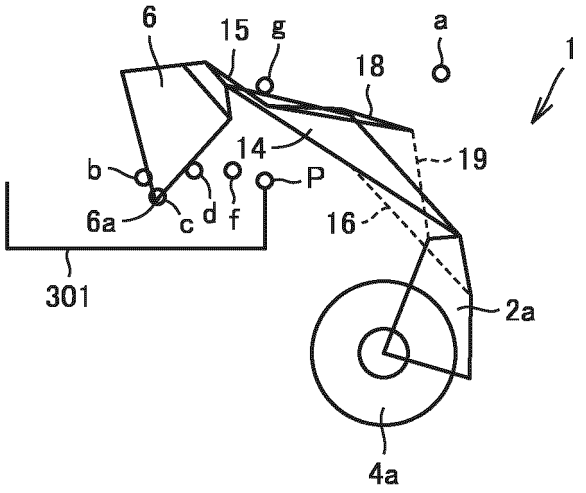
6
15
g
a
1
18
14
19
b
P
6a
c
d
f
16
301
2a
4a

FIG.12

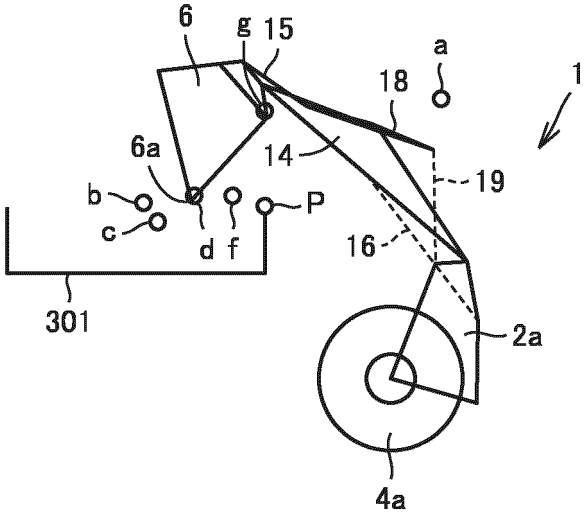
6
g
15
a
1
18
6a
14
19
b
P
c
d
f
16
301
2a
4a

FIG.13

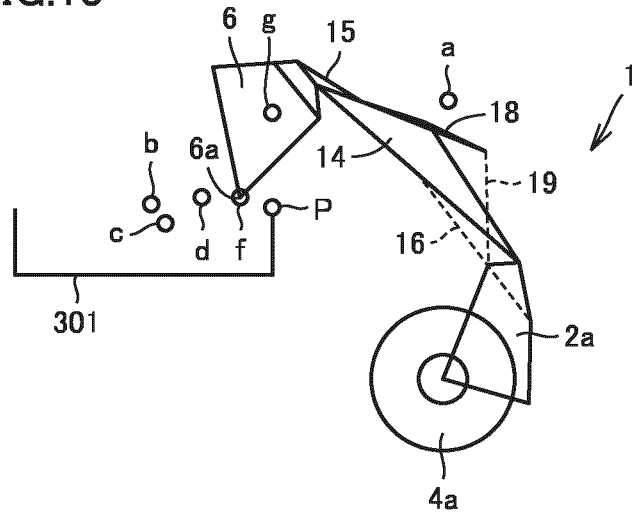
6
g
15
a
1
18
b
6a
14
19
P
c
d
f
16
301
2a
4a

FIG.14

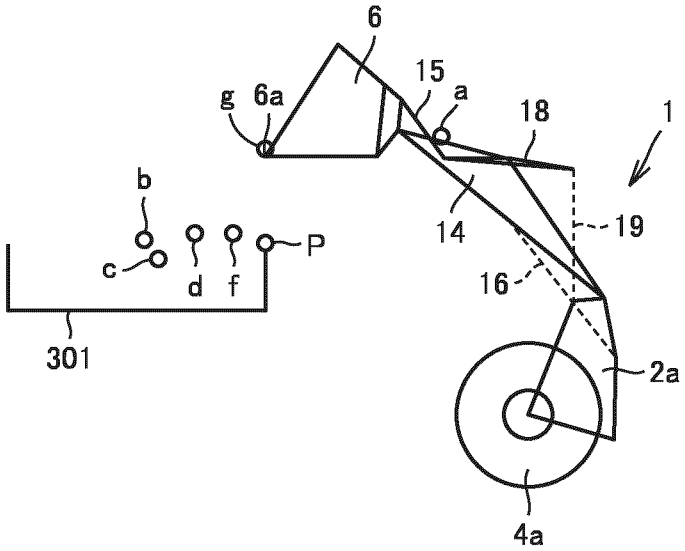
6
15
g
6a
a
18
1
b
14
19
P
c
d
f
16
301
2a
4a

FIG.15

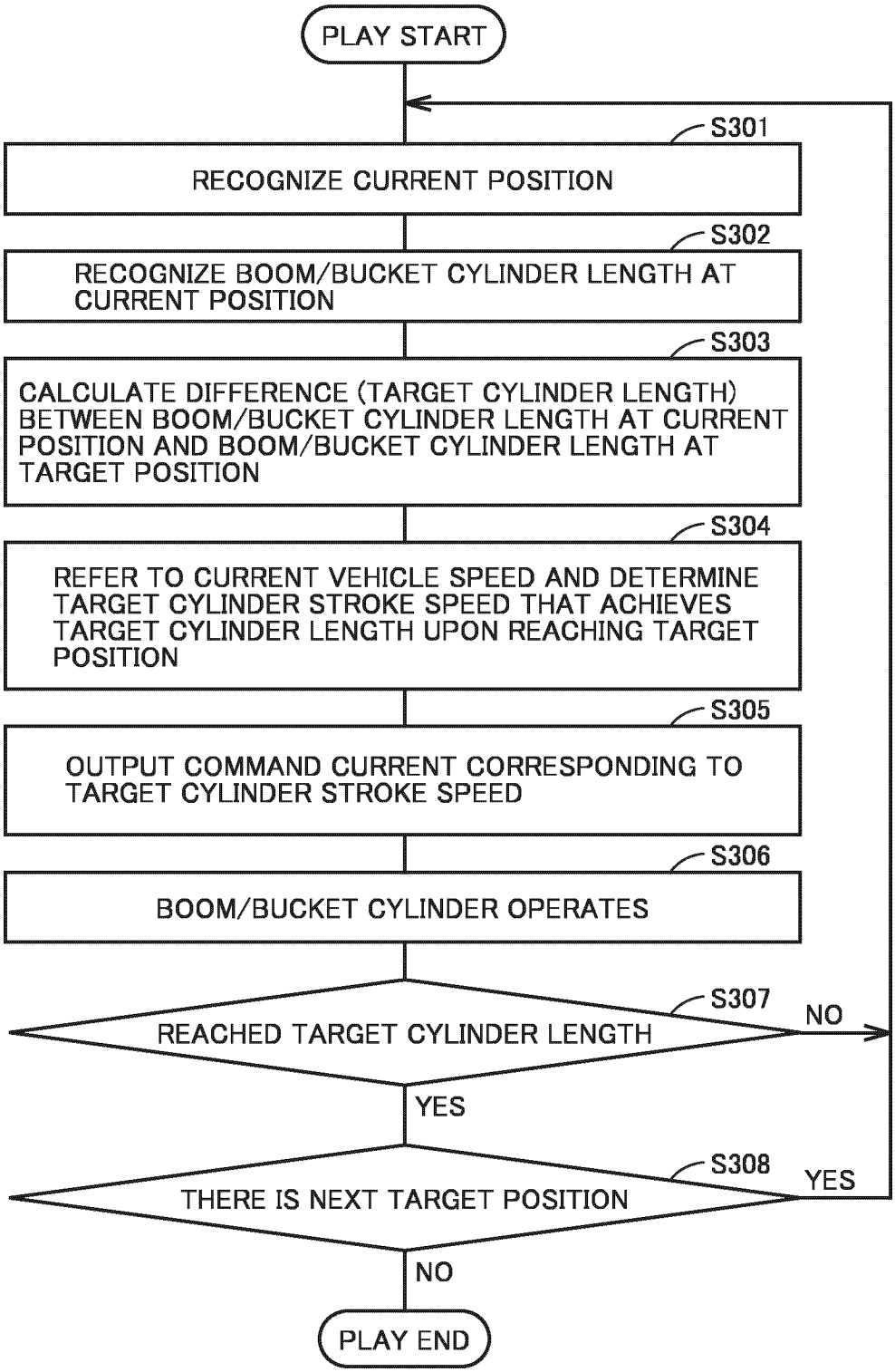
PLAY START
S301
RECOGNIZE CURRENT POSITION
S302
RECOGNIZE BOOM/BUCKET CYLINDER LENGTH AT CURRENT POSITION
S303
CALCULATE DIFFERENCE (TARGET CYLINDER LENGTH) BETWEEN BOOM/BUCKET CYLINDER LENGTH AT CURRENT POSITION AND BOOM/BUCKET CYLINDER LENGTH AT TARGET POSITION
S304
REFER TO CURRENT VEHICLE SPEED AND DETERMINE TARGET CYLINDER STROKE SPEED THAT ACHIEVES TARGET CYLINDER LENGTH UPON REACHING TARGET POSITION
S305
OUTPUT COMMAND CURRENT CORRESPONDING TO TARGET CYLINDER STROKE SPEED
S306
BOOM/BUCKET CYLINDER OPERATES
S307
REACHED TARGET CYLINDER LENGTH
NO
YES
S308
THERE IS NEXT TARGET POSITION
YES
NO
PLAY END

INTERNATIONAL SEARCH REPORT

International application No.
PCT/JP2023/031879

A. CLASSIFICATION OF SUBJECT MATTER

E02F 3/43(2006.01)i; ***E02F 9/20***(2006.01)i
FI: E02F3/43 A; E02F9/20 N

According to International Patent Classification (IPC) or to both national classification and IPC

B. FIELDS SEARCHED

Minimum documentation searched (classification system followed by classification symbols)

E02F3/43, E02F9/20, E02F9/24, E02F9/26

Documentation searched other than minimum documentation to the extent that such documents are included in the fields searched

Published examined utility model applications of Japan 1922-1996
Published unexamined utility model applications of Japan 1971-2023
Registered utility model specifications of Japan 1996-2023
Published registered utility model applications of Japan 1994-2023

Electronic data base consulted during the international search (name of data base and, where practicable, search terms used)

C. DOCUMENTS CONSIDERED TO BE RELEVANT

Category*	Citation of document, with indication, where appropriate, of the relevant passages	Relevant to claim No.
A	JP 2020-122389 A (SUMITOMO SHI CONSTRUCTION MACHINERY CO LTD) 13 August 2020 (2020-08-13) paragraphs [0011]-[0063], fig. 1-6	1-10
A	JP 2021-59945 A (SUMITOMO HEAVY INDUSTRIES) 15 April 2021 (2021-04-15) paragraphs [0191]-[0215], fig. 4	1-10
A	WO 2019/181872 A1 (SUMITOMO HEAVY INDUSTRIES) 26 September 2019 (2019-09-26) paragraphs [0087]-[0146], fig. 4-10	1-10
A	JP 2018-24997 A (HITACHI CONSTRUCTION MACHINERY) 15 February 2018 (2018-02-15) paragraphs [0011]-[0073], fig. 1-7	1-10

☐ Further documents are listed in the continuation of Box C. ☑ See patent family annex.

* Special categories of cited documents:
"A" document defining the general state of the art which is not considered to be of particular relevance
"E" earlier application or patent but published on or after the international filing date
"L" document which may throw doubts on priority claim(s) or which is cited to establish the publication date of another citation or other special reason (as specified)
"O" document referring to an oral disclosure, use, exhibition or other means
"P" document published prior to the international filing date but later than the priority date claimed
"T" later document published after the international filing date or priority date and not in conflict with the application but cited to understand the principle or theory underlying the invention
"X" document of particular relevance; the claimed invention cannot be considered novel or cannot be considered to involve an inventive step when the document is taken alone
"Y" document of particular relevance; the claimed invention cannot be considered to involve an inventive step when the document is combined with one or more other such documents, such combination being obvious to a person skilled in the art
"&" document member of the same patent family

Date of the actual completion of the international search	Date of mailing of the international search report
05 October 2023	**24 October 2023**
Name and mailing address of the ISA/JP **Japan Patent Office (ISA/JP)** **3-4-3 Kasumigaseki, Chiyoda-ku, Tokyo 100-8915** **Japan**	Authorized officer Telephone No.

Form PCT/ISA/210 (second sheet) (January 2015)

INTERNATIONAL SEARCH REPORT
Information on patent family members

International application No.
PCT/JP2023/031879

Patent document cited in search report	Publication date (day/month/year)	Patent family member(s)	Publication date (day/month/year)
JP 2020-122389 A	13 August 2020	WO 2017/115809 A1 paragraphs [0011]-[0063], fig. 1-6 JP 2021-88930 A JP 2021-88929 A JP 2021-92147 A US 2018/0305902 A1 US 2020/0399865 A1 EP 3399109 A1 CN 108474195 A KR 10-2018-0097614 A CN 113107045 A CN 113107046 A	
JP 2021-59945 A	15 April 2021	(Family: none)	
WO 2019/181872 A1	26 September 2019	US 2021/0002851 A1 paragraphs [0108]-[0168], fig. 4-10 EP 3770333 A1 KR 10-2020-0130331 A CN 111954737 A	
JP 2018-24997 A	15 February 2018	(Family: none)	

Form PCT/ISA/210 (patent family annex) (January 2015)

REFERENCES CITED IN THE DESCRIPTION

This list of references cited by the applicant is for the reader's convenience only. It does not form part of the European patent document. Even though great care has been taken in compiling the references, errors or omissions cannot be excluded and the EPO disclaims all liability in this regard.

Patent documents cited in the description

- WO 2020224768 A **[0002] [0003]**