(19) Europäisches Patentamt
European Patent Office
Office européen des brevets

(11) EP 4 825 202 A1

(12) EUROPEAN PATENT APPLICATION
published in accordance with Art. 153(4) EPC

(43) Date of publication:
21.10.2026 Bulletin 2026/43

(21) Application number: **23961414.2**

(22) Date of filing: **13.12.2023**

(51) International Patent Classification (IPC):
A24F 40/40 *(2020.01)*

(52) Cooperative Patent Classification (CPC):
A24F 40/40

(86) International application number:
PCT/JP2023/044551

(87) International publication number:
WO 2025/126347 (19.06.2025 Gazette 2025/25)

(84) Designated Contracting States:
AL AT BE BG CH CY CZ DE DK EE ES FI FR GB GR HR HU IE IS IT LI LT LU LV MC ME MK MT NL NO PL PT RO RS SE SI SK SM TR

(71) Applicant: **Japan Tobacco Inc.**
Tokyo 105-6927 (JP)

(72) Inventors:
- **NISHIMURA, Yuki**
Tokyo 130-8603 (JP)
- **MASUDA, Yuki**
Tokyo 130-8603 (JP)
- **SATO, Noriyoshi**
Tokyo 130-8603 (JP)

(74) Representative: **Hoffmann Eitle**
Patent- und Rechtsanwälte PartmbB
Arabellastraße 30
81925 München (DE)

(54) **FLAVOR INHALER**

(57) A flavor inhaler is provided. The flavor inhaler has a main body portion having an internal space, and a sliding portion that is attached so as to be capable of sliding relative to the main body portion along a first direction between a first position and a second position. The main body portion has a fixed member for attaching the sliding portion to the main body portion. The sliding portion has elongated holes extending in the first direction. The fixed member is disposed so as to penetrate through the elongated holes toward a third direction perpendicular to both the first direction and a second direction connecting the internal space of the main body portion and the sliding portion.

Figure 7

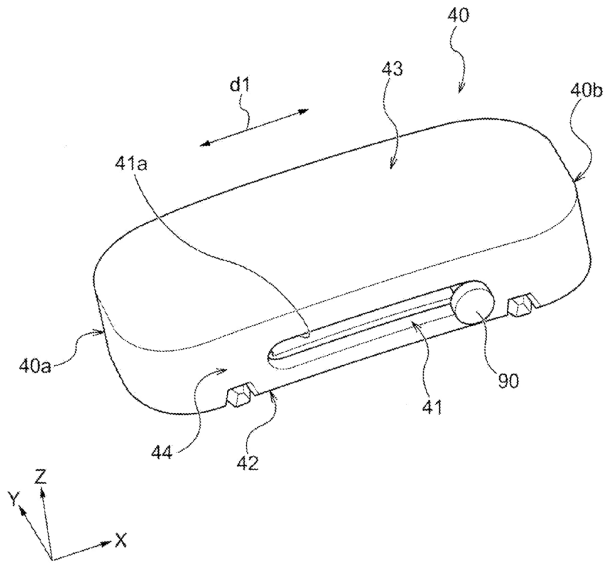

EP 4 825 202 A1

Description

TECHNICAL FIELD

[0001] The present invention relates to a flavor inhaler.

BACKGROUND ART

[0002] Flavor inhalers for inhaling flavors, etc., without combustion of materials are conventionally known. A flavor inhaler includes, for example, a chamber for accommodating a flavor generating article and a heater for heating the flavor generating article accommodated in the chamber (see, for example, PTL 1-3).

CITATION LIST

PATENT LITERATURE

[0003]

PTL 1: JP 2001-521123 A
PTL 2: JP 5963375 B2
PTL 3: WO 2016/207407 A1
PTL 4: JP 2022-527088 A
PTL 5: JP 2021-023137 A

SUMMARY OF INVENTION

TECHNICAL PROBLEM

[0004] As disclosed in PTL 4 and PTL 5, a flavor inhaler may have a sliding mechanism that slides relative to a housing, such as a lid for opening and closing an opening into which the flavor generating article is inserted. Such sliding mechanisms tend to have a complex structure, so the sliding mechanism may need to be manually incorporated into the flavor inhaler. Also, such sliding mechanisms may become detached from the main body of the flavor inhaler after a certain period of use.

[0005] One of the aims of the present invention is to inhibit detachment of the sliding mechanism from the main body portion of the flavor inhaler using a simple structure.

SOLUTION TO PROBLEM

[0006] A first aspect of the present invention provides a flavor inhaler. The flavor inhaler has a main body portion having an internal space, and a sliding portion that is attached so as to be capable of sliding relative to the main body portion along a first direction between a first position and a second position. The main body portion has a fixed member for attaching the sliding portion to the main body portion. The sliding portion has elongated holes extending in the first direction. The fixed member is disposed so as to penetrate through the elongated holes toward a third direction perpendicular to both the first direction and a second direction connecting the internal space of the main body portion and the sliding portion.

[0007] According to the first aspect, since the fixed member is disposed so as to penetrate through the elongated holes in the sliding portion, a simple structure can be used to guide the sliding portion in the first direction while inhibiting detachment of the sliding portion from the main body portion. Furthermore, since the fixed member penetrates through the elongated holes in the third direction, the fixed member does not extend into the internal space of the main body portion, and an increase in the size of the main body portion can be inhibited. Furthermore, since the fixed member does not extend in the first direction, an unnecessary increase in the length of the sliding portion in the first direction can be inhibited.

[0008] The sliding portion may have a bottom portion located on the internal space side, a top portion facing the bottom portion, and side portions located between the bottom portion and the top portion and extending in the first direction, and the elongated holes may be formed in the side portions and the top portion and the side portions may be molded integrally.

[0009] In this case, since the top portion is molded integrally with the side portions in which the elongated holes are formed, detachment of the top portion from the main body portion can be inhibited.

[0010] The sliding portion may have a bottom member located on the internal space side and a top member configured to cover the bottom member.

[0011] In this case, if there are components inside the sliding portion, the bottom member and the top member can hold those components.

[0012] The bottom member may be disposed between the main body portion and the fixed member.

[0013] In this case, detachment of the bottom member from the main body portion can be inhibited by the fixed member.

[0014] The top member may have a first end surface facing the internal space of the main body portion, and the first end surface may be disposed so as to be spaced apart from the main body portion.

[0015] In this case, since no friction is generated between the main body portion and the top member, friction generated between the main body portion and the sliding portion when the sliding portion slides can be reduced, and wear of the sliding portion and the main body portion can be reduced.

[0016] The bottom member may be disposed so as to be capable of coming into contact with the fixed member.

[0017] In this case, arranging that the fixed member can contact the bottom member makes it possible to inhibit rattling of the bottom member and inhibit detachment of the bottom member.

[0018] The bottom member may have a first surface located on the internal space side and first projecting portions provided on the first surface, and the bottom member may contact the main body portion via the first projecting portions.

[0019] In this case, the surface area of contact between the bottom member and the main body portion can be reduced, allowing the sliding portion to be slid smoothly. In addition, wear between the bottom member and the main body portion can be reduced.

[0020] The bottom member may have a second surface that extends in the first direction and the second direction and second projecting portions provided on the second surface, and the bottom member may contact the main body portion via the second projecting portions.

[0021] In this case, the surface area of contact between the bottom member and the main body portion can be reduced, allowing the sliding portion to be slid smoothly and inhibiting the occurrence of rattling of the sliding portion in the third direction.

[0022] The fixed member may have a first edge portion facing the internal space side and a second edge portion opposite to the first edge portion, and the second edge portion may be disposed so as not to contact the sliding portion.

[0023] In this case, friction between the fixed member and the sliding portion can be reduced, allowing the sliding portion to be slid smoothly. It is also possible to inhibit distortion of the fixed member resulting from the fixed member coming into contact with the sliding portion.

[0024] The main body portion may have a through-hole, and the fixed member may be rod-shaped and fixed to the main body portion by being passed through the through-hole.

[0025] In this case, the fixed member can be securely fixed to the main body portion.

[0026] The main body portion may have a recessed portion, and one end of the fixed member may be fixed to the main body portion by being accommodated in the recessed portion.

[0027] In this case, by inserting the fixed member into the through-hole, and accommodating said one end in the recessed portion and holding the other end in the through-hole, both ends of the fixed member are supported by the main body portion. As a result, excessive insertion of the fixed member in the length direction thereof can be inhibited, thereby facilitating positioning and allowing the fixed member to be held in a manner that reduces the risk of damage. As a result, it is possible to suppress the need for the diameter of the fixed member to be increased to improve rigidity, and to suppress an associated increase in the size of the main body portion.

[0028] The main body portion may have a housing that defines the internal space and a wall portion that defines the through-hole, and the wall portion may be molded integrally with the housing.

[0029] In this case, since the wall portion in which the through-hole is formed does not become disassembled from the housing, the sliding portion can be reliably inhibited from becoming detached from the housing together with the wall portion.

[0030] The through-hole does not need to communicate with the internal space of the main body portion.

[0031] In this case, the ingress of foreign matter, liquid, etc., into the internal space of the main body portion through the through-hole can be inhibited, thereby reducing the occurrence of failure of the flavor inhaler.

[0032] A panel covering the through-hole may be provided so that the through-hole is not visible from the outside.

[0033] In this case, a deterioration in appearance due to the visibility of the through-hole can be inhibited and the user can be inhibited from disassembling the flavor inhaler.

[0034] The fixed member may have a first part that can pass through the through-hole and a second part that cannot pass through the through-hole, and the first part may be disposed so as to penetrate through the elongated holes of the sliding portion.

[0035] In this case, excessive insertion of the fixed member in the length direction thereof can be inhibited, thereby facilitating positioning.

[0036] The sliding portion may have edge portions that define the elongated holes, and the fixed member may be spaced apart from the edge portions when the sliding portion slides in the first direction.

[0037] In this case, friction between the fixed member and the sliding portion can be reduced, allowing the sliding portion to be slid smoothly. It is also possible to inhibit wear of the fixed member and the sliding portion resulting from the fixed member coming into contact with the sliding portion.

[0038] The sliding portion may have a front end portion and a rear end portion that face one another in the first direction, and the front end portion and rear end portion may be configured so as not to be in contact with the main body portion when the sliding portion is located in the first position or the second position.

[0039] In this case, since damage resulting the front end portion and the rear end portion coming into contact with the main body portion can be inhibited, a deterioration in the appearance of the sliding portion through use can be inhibited.

[0040] The main body portion may have an opening through which the flavor generating article can be inserted, and the first position may be a closed position for covering the opening and the second position may be an open position for opening the opening.

[0041] In this case, the sliding portion can function as a lid for opening and closing the opening.

[0042] A second aspect of the present invention provides a flavor inhaler. The flavor inhaler includes a main body portion having an internal space, and a sliding

portion that is attached so as to be capable of sliding relative to the main body portion along a first direction between a first position and a second position. The sliding portion has a first magnet and a second magnet that are disposed spaced apart from each other along the first direction. The main body portion has a fixed member that is positioned at least partially between the first magnet and the second magnet and is configured to receive attractive forces from the first magnet and the second magnet.

[0043] According to the second aspect, the sliding portion can be urged to and fixed in the first position, for example, by the first magnet approaching the fixed member and imparting an attractive force thereto, and the sliding portion can be urged to and fixed in the second position by the second magnet approaching the fixed member and applying an attractive force thereto. Therefore, since the sliding mechanism can be configured by the first magnet and the second magnet provided in the sliding portion, the sliding mechanism can be made compact.

[0044] The first magnet has a first end facing the internal space of the main body portion and a second end opposite to the first end, and the fixed member may be disposed closer to the first end than an intermediate position between the first end and the second end.

[0045] If the fixed member is disposed closer to the second end than the intermediate position, the sliding portion including the first magnet will be located relatively toward the internal space, and this may increase the size of the main body portion by an amount corresponding to the amount required for the sliding portion. In contrast, if the fixed member is disposed closer to the first end than the intermediate position, the sliding portion including the first magnet is located on the outer side of the main body portion, and therefore an increase in the size of the main body portion can be suppressed.

[0046] The first magnet may be configured to contact the fixed member when the sliding portion is located in the first position, and the second magnet may be configured to contact the fixed member when the sliding portion is located in the second position.

[0047] In this case, when the sliding portion slides between the first position and the second position, the fixed member comes into contact with the first magnet or the second magnet, thereby imparting a click sensation to the user and allowing an improvement in operability. Furthermore, since the first magnet and the second magnet function as contacting members that come into contact with the fixed member, an increase in the number of components can be suppressed.

[0048] The sliding portion may have contacting portions that contact the fixed member in the first position or the second position.

[0049] In this case, when the sliding portion slides between the first position and the second position, the fixed member and the contacting portions come into contact with one another, thereby imparting a click sensation to the user and allowing an improvement in operability. Furthermore, by providing the sliding portion with the contacting portions that are different from the first magnet and the second magnet, it is possible to suppress the occurrence of damage or displacement of the first magnet and the second magnet resulting from the first magnet and the second magnet coming into contact with the fixed member.

[0050] The fixed member may extend in a third direction perpendicular to both the first direction and a second direction connecting the internal space and the sliding portion.

[0051] In this case, since the fixed member does not extend into the internal space of the main body portion, an increase in the size of the main body portion can be suppressed. Furthermore, since the fixed member does not extend in the direction (first direction) in which the first magnet and the second magnet are arranged, an unnecessary increase in the length of the sliding portion in the first direction can be suppressed.

[0052] The fixed member may extend to a length exceeding the width of the sliding portion in the third direction.

[0053] In this case, since the fixed member has sufficient length, it can fully receive the attractive forces of the first magnet and the second magnet, and the sliding portion can be stably fixed at the first position or the second position. Furthermore, in this case, since both ends of the fixed member may protrude from the sliding portion, both ends of the fixed member can be stably fixed to the main body portion.

[0054] There may be a sensor that detects the position of the first magnet and/or the second magnet.

[0055] In this case, the position of the sliding portion can be detected by the sensor. Therefore, if the sliding portion is a lid that opens and closes the opening into which the flavor generating article is inserted, for example, the open/closed state of the lid can be detected by the sensor.

[0056] The sliding portion may have a stopper portion that contacts a third end, which faces the fixed member, of the first magnet and/or the second magnet.

[0057] If positioning is effected by means of a stopper portion at a fourth end, opposite to the third end, of the first magnet or the second magnet, variations in the distance to the fixed member may occur depending on the dimensional tolerances of the first magnet or the second magnet. In contrast, by positioning the first magnet and/or the second magnet using the stopper portion at the third end of the first magnet and/or the second magnet, it is possible to suppress variations in the distance to the fixed member. Furthermore, since the third end facing the fixed member contacts the stopper portion, it is possible to prevent the first magnet and/or the second magnet from moving toward the fixed member even if the first magnet and/or the second magnet exerts an attractive force on the fixed

member.

[0058] The sliding portion may have a space that opens the fourth end, opposite to the third end, of the first magnet and/or the second magnet.

[0059] If the third end and the fourth end of the first magnet or the second magnet are fixed to the sliding portion so as to be sandwiched thereby, variations in the positions thereof may occur depending on the dimensional tolerances of the first magnet or the second magnet. In contrast, by having the fourth end of the first magnet and/or the second magnet open, the position of the first magnet and/or the second magnet is determined only by the stopper portion, making it possible to suppress variations in the distance to the fixed member.

[0060] The sliding portion may include a bottom member that is located on the internal space side and a top member that sandwiches the first magnet and the second magnet together with the bottom member, and the bottom member and the top member may sandwich the first magnet and the second magnet in the second direction connecting the internal space and the sliding portion.

[0061] In this case, since the first magnet and the second magnet are sandwiched by the bottom member and the top member from the second direction, displacement of the first magnet and the second magnet in the second direction can be suppressed.

[0062] The first magnet and the second magnet may be bonded to either the bottom member or the top member.

[0063] In this case, it is possible to suppress displacement or detachment of the first magnet and the second magnet during assembly of the bottom member and the top member.

[0064] The sliding portion may have cushioning members provided between the first magnet and second magnet and the other of the bottom member and the top member.

[0065] In this case, it is possible to suppress displacement of the first magnet and the second magnet during assembly of the bottom member and the top member or excessive pressure on the first magnet and the second magnet from the bottom member and the top member. It is also possible to reduce impacts on the first magnet and the second magnet if the flavor inhaler is dropped.

[0066] The main body portion may have an opening through which the flavor generating article can be inserted, and the first position may be a closed position for covering the opening and the second position may be an open position for opening the opening.

[0067] In this case, the sliding portion can function as a lid for opening and closing the opening.

BRIEF DESCRIPTION OF DRAWINGS

[0068]

Fig. 1 is a schematic cross-sectional side view showing a smoking system according to the embodiment.

Fig. 2 is a schematic cross-sectional side view of a flavor inhaler as shown in fig. 1.

Fig. 3 is a top view of the flavor inhaler.

Fig. 4 is an enlarged partial oblique view of a sliding portion of the flavor inhaler.

Fig. 5 is an enlarged partial oblique view of the flavor inhaler showing a state in which the sliding portion of fig. 4 has been removed.

Fig. 6 is an oblique view of a fixed member.

Fig. 7 is an oblique view of the sliding portion.

Fig. 8 is an exploded oblique view of the sliding portion.

Fig. 9 is a cross-sectional side view of the sliding portion.

Fig. 10 is an oblique view of a bottom member.

Fig. 11 is a bottom view of the sliding portion with the bottom member removed.

DESCRIPTION OF EMBODIMENTS

[0069] Embodiments of the present invention will be described below with reference to the drawings. In the drawings described below, identical or corresponding components are assigned the same reference symbols and duplicate descriptions will not be given. Fig. 1 is a schematic cross-sectional side view showing a smoking system 100 according to the present embodiment. Fig. 2 is a schematic cross-sectional side view of a flavor inhaler 120 as shown in fig. 1. An X-Y-Z orthogonal coordinate system may be applied to the drawings described in the present specification for convenience of description. In this coordinate system, the Z-axis is oriented vertically upward, the X-Y plane is arranged cutting across the flavor inhaler 120 in a horizontal direction, and the Y-axis is arranged extending from a front face to a rear face of the flavor inhaler 120. The Z-axis may also refer to the insertion direction of a flavor generating article 110 which is accommodated in a heater assembly 30, described later. Furthermore, the X-axis direction may also refer to a device longitudinal direction in a plane orthogonal to the insertion direction of the flavor generating article 110, or to a first direction d1 in which a sliding portion 40 slides. The Y-axis direction may also refer to a device lateral direction in a plane orthogonal to the insertion direction of the flavor

inhaler 120.

[0070] As shown in fig. 1, the smoking system 100 comprises the flavor generating article 110, which includes a smokable material, and the flavor inhaler 120, which heats and atomizes the smokable material. In the present embodiment, a case is illustrated in which a puff action is performed while the user holds the flavor generating article 110 in their mouth. Air to be inhaled by the user is directed into the oral cavity of the user, for example in the order of air flow 100A, air flow 100C, and air flow 100B.

[0071] The flavor generating article 110 is a substrate containing a smokable material such as tobacco capable of generating a smokable flavor, and has, for example, a columnar shape extending along the longitudinal direction. The flavor generating article 110 may be a tobacco stick, for example.

[0072] As shown in fig. 2, the flavor inhaler 120 has a main body portion 130 having an internal space 130a, and a sliding portion 40 attached so as to be capable of sliding relative to the main body portion 130. The main body portion 130 may have a housing 131 that defines the internal space 130a. The sliding portion 40 is configured to be capable of sliding relative to the main body portion 130 between a first position and a second position along a first direction d1 (the X-axis direction in the illustrated example). Furthermore, as shown in fig. 1, the main body portion 130 may have an opening 130b through which the flavor generating article 110 can be inserted. In the present embodiment, the first position to which the sliding portion 40 moves is a closed position for covering the opening 130b (see fig. 2) and the second position is an open position for opening the opening 130b (see fig. 1). In other words, in the present embodiment, the sliding portion 40 can function as a lid for opening and closing the opening 130b. The sliding portion 40 is not limited thereto, and may be any component provided in the flavor inhaler 120.

[0073] The flavor inhaler 120 includes a battery 10, a control circuit 20 and a heater assembly 30. These are housed in the internal space 130a. The battery 10 stores electric power for use by the flavor inhaler 120. The battery 10 is a lithium ion battery, for example. The battery 10 may be rechargeable by means of an external power source.

[0074] The control circuit 20 is configured by a CPU and a memory, etc., and controls the operations of the flavor inhaler 120. For example, the control circuit 20 starts heating of the flavor generating article 110 in response to a user operation on an input device such as a pushbutton or slide switch (not depicted), and terminates heating of the flavor generating article 110 once a given time has elapsed. When the number of puffing actions performed by the user has passed a fixed value, the control circuit 20 may terminate heating of the flavor generating article 110 even if the given time has not yet elapsed from the start of heating of the flavor generating article 110. Puffing actions are detected by a sensor (not depicted), for example.

[0075] Alternatively, the control circuit 20 may start heating of the flavor generating article 110 in response to the start of a puffing action, and may terminate heating of the flavor generating article 110 in response to the end of the puffing action. When a given time has elapsed from the start of the puffing action, the control circuit 20 may terminate heating of the flavor generating article 110 even if the puffing action has not yet finished. In the present embodiment, the control circuit 20 is disposed between the battery 10 and the heater assembly 30, and transfer of heat from the heater assembly 30 to the battery 10 is suppressed.

[0076] The heater assembly 30 is an assembly for heating the flavor generating article 110. The heater assembly 30 has a chamber 32 for accepting the flavor generating article 110, and a heating portion (not shown). The heating portion (not shown) is configured to heat the flavor generating article 110 that has been accepted into the chamber 50. The heating portion is a heat generating body that generates heat by means of electric power from the battery 10, which is to say that the temperature thereof rises. The heating portion may be a heater disposed in the flavor inhaler 120. The heater may comprise a heating wire. Furthermore, the heater may equally be configured to generate heat by means of an induction coil (not shown). The heater may be configured to heat the flavor generating article 110 accommodated in the chamber 32 from the outside or the inside of the flavor generating article 110. Instead of the heating portion, the flavor generating article 110 may internally include a susceptor. In that case, the susceptor may be inductively heated by means of an induction coil disposed in the flavor inhaler 120. Alternatively, the flavor inhaler 120 may have a microwave radiation source as the heating portion. In that case, a microwave absorber such as water or glycerol contained in the flavor generating article 110 may be heated by means of microwaves from the microwave radiation source.

[0077] The sliding portion 40 shown in fig. 1 and fig. 2 will next be described in detail. Fig. 3 is a top view of the flavor inhaler 120. Fig. 4 is an enlarged partial oblique view of the sliding portion 40 of the flavor inhaler 120. Fig. 5 is an enlarged partial oblique view of the flavor inhaler 120 showing a state in which the sliding portion 40 of fig. 4 has been removed. As shown in fig. 3, the main body portion 130 includes the housing 131 and a panel 132 attached to the housing 131. It should be noted that in fig. 4 and fig. 5, the flavor inhaler 120 is shown with the panel 132 removed. The main body portion 130 has a recessed portion 133 in which the sliding portion 40 is disposed. In the present embodiment, the recessed portion 133 is formed in an upper portion of the main body portion 130. The recessed portion 133 has a bottom wall portion 133a and a side wall portion 133b. The opening 130b is formed in the bottom wall portion 133a. The sliding portion 40 is con-

figured to slide inside the recessed portion 133 in the first direction d1. In the illustrated example, the side wall portion 133b extends around the entire periphery of the sliding portion 40, but the side wall portion 133b may equally be configured to enclose a portion of the outer periphery of the sliding portion 40.

[0078] As shown in fig. 4 or fig. 5, the main body portion 130 has a fixed member 90 for attaching the sliding portion 40 to the main body portion 130. The fixed member 90 extends toward a third direction (Y-axis direction) perpendicular to both the first direction d1 and a second direction d2 (Z-axis direction) connecting the internal space 130a of the main body portion 130 and the sliding portion 40. Specifically, as shown in fig. 5, it is preferable that the fixed member 90 is rod-shaped, the main body portion 130 has a through-hole 134, and the rod-shaped fixed member 90 is fixed to the main body portion 130 by being passed through the through-hole 134. In this case, the fixed member 90 can be securely fixed to the main body portion 130. Although the through-hole 134 in the example shown in fig. 4 and fig. 5 is circular, the through-hole 134 may have any shape. It should be noted that the fixed member 90 may, for example, be disposed so as to extend from the internal space 130a of the main body portion 130 to the interior of the recessed portion 133 along the second direction d2. In that case, the part of the fixed member 90 protruding into the recessed portion 133 may guide the sliding portion 40 to slide in the first direction d1.

[0079] As shown in fig. 5, the main body portion 130 may have a recessed portion 135. In this case, one end of the fixed member 90 is preferably fixed to the main body portion 130 by being accommodated in the recessed portion 135. In this case, by inserting the fixed member 90 into the through-hole 134, and accommodating said one end in the recessed portion 135 and holding the other end in the through-hole 134, both ends of the fixed member 90 are supported by the main body portion 130. As a result, excessive insertion of the fixed member 90 in the length direction thereof can be inhibited, thereby facilitating positioning and allowing the fixed member 90 to be held in a manner that reduces the risk of damage. As a result, it is possible to suppress the need for the diameter of the fixed member 90 to be increased to improve rigidity, and to suppress an associated increase in the size of the main body portion 130. In the illustrated example, the recessed portion 135 is formed in the side wall portion 133b of the recessed portion 133. Instead of the recessed portion 135, the main body portion 130 may have a through-hole into which said one end of the fixed member 90 is inserted.

[0080] It is preferable that the main body portion 130 has a wall portion 136 defining the through-hole 134, and that the wall portion 136 is molded integrally with the housing 131. In this case, since the wall portion 136 in which the through-hole 134 is formed does not become disassembled from the housing 131, the sliding portion 40 can be reliably inhibited from becoming detached from the housing 131 together with the wall portion 136. In the illustrated example, the wall portion 136 is the same part as the side wall portion 133b of the recessed portion 133. It is preferable that the through-hole 134 does not communicate with the internal space 130a of the main body portion 130. In this case, the ingress of foreign matter, liquid, etc., into the internal space 130a of the main body portion 130 through the through-hole 134 can be inhibited, thereby reducing the occurrence of failure of the flavor inhaler 120. In the example shown in fig. 4 and fig. 5, the through-hole 134 and the internal space 130a are configured so as not to communicate with one another by attaching the panel 132 to the housing 131. In other words, the panel 132 is configured to partition the through-hole 134 and the internal space 130a into separate spaces. The panel 132 preferably covers the through-hole 134 so that the through-hole 134 is not visible from the outside. In this case, a deterioration in appearance due to the visibility of the through-hole 134 can be inhibited and the user can be inhibited from disassembling the flavor inhaler 120.

[0081] As shown in fig. 3 and fig. 4, the sliding portion 40 has a front end portion 40a and a rear end portion 40b that face one another in the first direction d1. In this case, the front end portion 40a and rear end portion 40b are preferably configured so as not to be in contact with the main body portion 130 when the sliding portion 40 is located in the first position (the closed position shown in fig. 3 and fig. 4) or the second position (the open position). Specifically, it is preferable that the front end portion 40a does not contact the side wall portion 133b close to the front end portion 40a when the sliding portion 40 is located in the closed position shown in fig. 3 and fig. 4, and that the rear end portion 40b does not contact the side wall portion 133b close to the rear end portion 40b when the sliding portion 40 is located in the open position. In this case, since damage resulting the front end portion 40a and the rear end portion 40b coming into contact with the main body portion 130 can be inhibited, a deterioration in the appearance of the sliding portion 40 through use can be inhibited.

[0082] Fig. 6 is an oblique view of the fixed member 90. As shown in fig. 6, the fixed member 90 comprises a first part 90a and a second part 90b having a larger diameter than the first part 90a. In the illustrated example, the first part 90a and the second part 90b have a circular cross-section and the first part 90a is longer than the second part 90b. As shown in fig. 5, the first part 90a is able to pass through the through-hole 134 in the wall portion 136, and the second part 90b is configured not to be able to pass through the through-hole 134. In this case, excessive insertion of the fixed member 90 in the length direction thereof can be inhibited, thereby facilitating positioning. Specifically, if the through-hole 134 is circular, the second part 90b may

have a larger diameter than the through-hole 134. Alternatively, the second part 90b may have a different shape (e.g. A rectangular cross-section) from the through-hole 134 such that it cannot pass through the through-hole 134. As shown in fig. 5, the end of the first part 90a of the fixed member 90 is inserted into the recess 135.

[0083] Fig. 7 is an oblique view of the sliding portion 40. In fig. 7, the fixed member 90 is also shown in order to facilitate understanding of the positional relationship between the fixed member 90 and the sliding portion 40. As shown in fig. 7, the sliding portion 40 is a member that is long in the first direction d1 and is generally plate-shaped as a whole. The sliding portion 40 has elongated holes 41 that extend in the first direction d1 (X-axis direction), and the fixed member 90 is disposed so as to penetrate through the elongated holes 41 toward a third direction (Y-axis direction). More specifically, the first part 90a of the fixed member 90 (see fig. 6) is disposed so as to penetrate through the elongated holes 41 of the sliding portion 40. As a result, a simple structure can be used to guide the sliding portion 40 in the first direction d1 while inhibiting detachment of the sliding portion 40 from the main body portion 130. Furthermore, since the fixed member 90 penetrates through the elongated holes 41 in the third direction, the fixed member does not extend into the internal space 130a of the main body portion 130, and an increase in the size of the main body portion 130 can be inhibited. Furthermore, since the fixed member 90 does not extend in the first direction d1, an unnecessary increase in the length of the sliding portion 40 in the first direction d1 can be inhibited.

[0084] The sliding portion 40 comprises a bottom portion 42 located on the internal space 130a side, a top portion 43 facing the bottom portion 42, and side portions 44 located between the bottom portion 42 and the top portion 43 and extending in the first direction d1. A front end portion 40a and a rear end portion 40a are configured to connect the pair of side portions 44. Here, it is preferable that the elongated holes 41 are formed in the side portions 44, and the top portion 43 and the side portions 44 are molded integrally. In this case, since the top portion 43 is molded integrally with the side portions 44 in which the elongated holes 41 are formed, detachment of the top portion 43 from the main body portion 130 can be inhibited.

[0085] The sliding portion 40 has edge portions 41a that define the elongated holes 41. Here, the fixed member 90 is preferably spaced apart from the edge portions 41a when the sliding portion 40 slides in the first direction d1. In other words, the fixed member 90 preferably does not come into contact with the edge portions 41a when the sliding portion 40 slides in the first direction d1. In this case, friction between the fixed member 90 and the sliding portion 40 can be reduced, allowing the sliding portion 40 to be slid smoothly. It is also possible to inhibit wear of the fixed member 90 and the sliding portion 40 resulting from the fixed member 90 coming into contact with the sliding portion 40.

[0086] Fig. 8 is an exploded oblique view of the sliding portion 40. In fig. 8, the fixed member 90 is also shown in order to facilitate understanding of the positional relationship between the fixed member 90 and the sliding portion 40. Fig. 9 is a cross-sectional side view of the sliding portion 40. As shown in fig. 8 and fig. 9, the sliding portion 40 may comprise a bottom member 60 and a top member 50. As shown in fig. 9, the bottom member 60 is located on the internal space 130a side when the sliding portion 40 is attached to the flavor inhaler 120, and the top member 50 is configured to cover the bottom member 60. In this case, if there are components inside the sliding portion 40, the bottom member 60 and the top member 50 can hold those components. With the top member 50 covering the bottom member 60, the top member 50 and the bottom member 60 may engage with one another to become integrated. Furthermore, the top member 50 and the bottom member 60 may also be detachable from one another.

[0087] The top member 50 has an upper wall portion 51 constituting the top portion 43 of the sliding portion 40, and a side wall portion 52 constituting the side portions 44 of the sliding portion 40 and extending from the upper wall portion 51. In the illustrated example, the side wall portion 52 extends around the entire periphery of the top member 50, but the side wall portion 52 may equally be configured to enclose a portion of the top member 50.

[0088] The top member 50 has elongated hole portions 53 constituting part or all of the elongated holes 41 of the sliding portion 40. In the illustrated example, the top member 50 has an upper edge portion 53a and a lower edge portion 53b that define each elongated hole portion 53. The upper edge portion 53a is the edge portion that is closer to the upper wall portion 51 than the lower edge portion 53b, and the lower edge portion 53b is the edge portion that is closer to the bottom member 60 than the upper edge portion 53a. Since the top member 50 includes the elongated hole portions 53, specifically the lower edge portions 53b, detachment of the top member 50 from the main body portion 130 can be inhibited by passing the fixed member 90 through the elongated hole portions 53. The configuration is not limited thereto, and the top member 50 does not necessarily need to have the lower edge portions 53b. That is, the top member 50 may have cut-outs without the lower edge portions 53b instead of the elongated hole portions 53. In this case, the upper edge portions 53a of the top member 50 and the bottom member 60 can constitute the elongated holes 41 of the sliding portion 40. It should be noted that, although one elongated hole 41 is shown in fig. 7 and fig. 8, an elongated hole through which the fixed member 90 is inserted is provided in the side wall portion 52 in a position facing the elongated hole 41. That is, the side

wall portion 52 is formed such that the pair of elongated holes 41 face each other.

[0089] As shown, the top member 50 has a first end surface 54 that faces the internal space 130a of the main body portion 130. The first end surface 54 is preferably disposed so as to be spaced apart from the main body portion 130. More specifically, the first end surface 54 is preferably disposed so as to be spaced apart from the bottom wall portion 133a of the recessed portion 133. In this case, since no friction is generated between the main body portion 130 and the top member 50, friction generated between the main body portion 130 and the sliding portion 40 when the sliding portion 40 slides can be reduced, and wear of the sliding portion 40 and the main body portion 130 can be reduced. In the illustrated example, the side wall portion 52 of the top member 50 includes the first end surface 54. Furthermore, the side wall portion 52 has cut-out portions 52a for partially receiving second projecting portions 62 of the bottom member 60, discussed hereinafter. The cut-out portions 52a are provided in the first end surface 54 of the side wall portion 52.

[0090] As shown in fig. 8, the bottom member 60 is a generally plate-shaped member as a whole, and is disposed so as to be at least partially enclosed by the side wall portion 52 of the top member 50, as shown in fig. 9. The bottom member 60 may define a portion of the elongated hole 41 shown in fig. 7. That is, by assembling the bottom member 60 and the top member 50, a portion of the edge portion 41a defining the elongated hole 41 may be defined by the upper edge portion 53a of the top member 50, and another portion of the edge portion 41a defining the elongated hole 41 may be defined by the bottom member 60. As shown in fig. 9, the bottom member 60 is preferably disposed between the main body portion 130 and the fixed member 90 when the sliding portion 40 is attached to the flavor inhaler 120. As a result, detachment of the bottom member 60 from the main body portion 130 can be inhibited by the fixed member 90.

[0091] As shown in fig. 9, the sliding portion 40 is arranged within the recessed portion 133 in such a way that the bottom member 60 contacts the main body portion 130. More specifically, the bottom member 60 has a first surface 63 located on the internal space 130a side, and the sliding portion 40 is disposed within the recessed portion 133 such that the first surface 63 of the bottom member 60 contacts the bottom wall portion 133a. Fig. 10 is an oblique view of the bottom member 60. As shown in fig. 10, the bottom member 60 preferably has first projecting portions 64 that are provided on the first surface 63. In this case, the bottom member 60 preferably comes into contact with the main body portion 130 via the first projecting portions 64. As a result, the surface area of contact between the bottom member 60 and the main body portion 130 can be reduced, allowing the sliding portion 40 to be slid smoothly. In addition, wear between the bottom member 60 and the main body portion 130 can be reduced. In the example shown in fig. 10, a plurality of first projecting portions 64 are provided respectively at substantially the center and both ends of the first surface 63 in the first direction d1.

[0092] As shown in fig. 8, the bottom member 60 preferably has a second surface 61 extending in the first direction d1 (X-axis direction) and the second direction d2 (Z-axis direction), and second projecting portions 62 provided on the second surface 61. In this case, the bottom member 60 preferably comes into contact with the main body portion 130 via the second projecting portions 62. More specifically, the bottom member 60 preferably comes into contact with the side wall portion 133b of the recessed portion 133 (see fig. 5) via the second projecting portions 62. As a result, the surface area of contact between the bottom member 60 and the main body portion 130 can be reduced, allowing the sliding portion 40 to be slid smoothly and inhibiting the occurrence of rattling of the sliding portion 40 in the third direction (Y-axis direction).

[0093] As described in relation to fig. 7, the fixed member 90 preferably does not come into contact with the edge portions 41a defining the elongated holes 41 when the sliding portion 40 slides in the first direction d1. Similarly, the bottom member 60 preferably does not come into contact with the fixed member 90 when the sliding portion 40 slides in the first direction d1. However, the bottom member 60 may be disposed so as to be capable of coming into contact with the fixed member 90. Specifically, for example, the bottom member 60 may come into contact with the fixed member 90 when the sliding portion 40 is pulled in the second direction d2 (Z-axis direction). This makes it possible to inhibit rattling of the bottom member 60 and inhibit detachment of the bottom member 60.

[0094] As shown in fig. 9, the fixed member 90 has a first edge portion 91 facing the internal space 130a side and a second edge portion 92 opposite to the first edge portion 91. More specifically, the first part 90a of the fixed member 90 (see fig. 6) has a first edge portion 91 that is close to the bottom member 60 and a second edge portion 92 that is on the opposite side to the first edge portion 91 and is close to the upper wall portion 51 of the top member 50. Here, the second edge portion 92 is preferably disposed so as not to come into contact with the sliding portion 40. In this case, friction between the fixed member 90 and the sliding portion 40 can be reduced, allowing the sliding portion 40 to be slid smoothly. It is also possible to inhibit distortion of the fixed member 90 resulting from the fixed member 90 coming into contact with the sliding portion 40.

[0095] As shown in fig. 8, the sliding portion 40 has a first magnet 81 and a second magnet 82 that are disposed spaced apart from each other along the first direction d1. Here, the fixed member 90 is positioned at least partially between the first magnet 81 and the second magnet 82 and is configured to receive attractive

forces from the first magnet 81 and the second magnet 82. As a result, the sliding portion 40 can be urged to and fixed in the first position (closed position), for example, by the first magnet 81 approaching the fixed member 90 and imparting an attractive force thereto, and the sliding portion 40 can be urged to and fixed in the second position (open position) by the second magnet 82 approaching the fixed member 90 and applying an attractive force thereto. Therefore, since the sliding mechanism can be configured by the first magnet 81 and the second magnet 82 provided in the sliding portion 40, the sliding mechanism can be made compact. The fixed member 90 may be formed of a ferromagnetic material such as stainless steel or steel, for example.

[0096] When a user operation causes the sliding portion 40 to slide from the first position (closed position) to the second position (open position), the fixed member 90, which is being attracted by the first magnet 81, moves away from the first magnet 81, thereby changing the load required to slide the sliding portion 40. The sliding portion 40 then approaches the second position, causing the fixed member 90 to move closer to the second magnet 82. At this time, the load for sliding the sliding portion 40 changes as the fixed member 90 approaches the second magnet 82. The change in the load for sliding the sliding portion 40 imparts a click sensation to the user, thereby allowing an improvement in operability. Specifically, the click sensation allows the user to feel that the sliding portion 40 is approaching the open position. Similarly, when a user operation causes the sliding portion 40 to slide from the second position (open position) to the first position (closed position), the fixed member 90, which is being attracted by the second magnet 82, moves away from the second magnet 82, thereby changing the load for sliding the sliding portion 40. The fixed member 90 then moves closer to the first magnet 81 as the sliding portion 40 approaches the first position. At this time, the load for sliding the sliding portion 40 changes as the fixed member 90 approaches the first magnet 81. The change in the load for sliding the sliding portion 40 imparts a click sensation to the user, thereby allowing an improvement in operability. Specifically, the click sensation allows the user to feel that the sliding portion 40 is approaching the closed position.

[0097] As shown in fig. 9, the bottom member 60 and the top member 50 preferably sandwich the first magnet 81 and the second magnet 82 in the second direction d2. In this case, displacement of the first magnet 81 and the second magnet 92 in the second direction d2 can be suppressed. The first magnet 81 and the second magnet 82 are preferably bonded to either the bottom member 60 or the top member 50. In this case, it is possible to suppress displacement or detachment of the first magnet 81 and the second magnet 82 during assembly of the bottom member 60 and the top member 50. In the present embodiment, the first magnet 81 and the second magnet 82 are bonded to the upper wall portion 51 of the top member 50 by adhesive tape or adhesive. for example. As shown in fig. 9, the sliding portion 40 preferably has cushioning members 88 provided between the first magnet 81 and second magnet 82 and the other of the bottom member 60 and the top member 50. In this case, it is possible to suppress displacement of the first magnet 81 and the second magnet 82 during assembly of the bottom member 60 and the top member 50 or excessive pressure on the first magnet 81 and the second magnet 82 from the bottom member 60 and the top member 50. It is also possible to reduce impacts on the first magnet 81 and the second magnet 82 if the flavor inhaler 120 is dropped. In the present embodiment, the cushioning members 88 are provided between the first magnet 81 and second magnet 82 and the bottom member 60. Equally, the first magnet 81 and the second magnet 82 may be bonded to the bottom member 60, and the cushioning members 88 may be provided between the first magnet 81 and second magnet 82 and the top member 50.

[0098] As shown in fig. 8 and fig. 9, the first magnet 81 has a first end 81a facing the internal space 130a of the main body portion 130 and a second end 81b opposite to the first end 81a. Here, as shown in fig. 9, the fixed member 90 is preferably disposed closer to the first end 81a than an intermediate position between the first end 81a and the second end 81b. If the fixed member 90 is disposed closer to the second end 81b than the intermediate position, the sliding portion 40 including the first magnet 81 will be located relatively toward the internal space 130a side, and this may increase the size of the main body portion 130 by an amount corresponding to the amount required for the sliding portion 40. In contrast, if the fixed member 90 is disposed closer to the first end 81a than the intermediate position, as shown in fig. 9, the sliding portion 40 including the first magnet 81 is located on the outer side of the main body portion 130, and therefore an increase in the size of the main body portion can be suppressed. Similarly, as shown in fig. 8 and fig. 9, the second magnet 82 has a first end 82a facing the internal space 130a of the main body portion 130 and a second end 82b opposite to the first end 82a. Here, as shown in fig. 9, the fixed member 90 is preferably disposed closer to the first end 82a than an intermediate position between the first end 82a and the second end 82b.

[0099] Furthermore, as shown in fig. 9, the flavor inhaler 120 may have a sensor 72 that detects the position of the first magnet 81 and/or the second magnet 82. In this case, the position of the sliding portion 40 can be detected by the sensor 72. Therefore, if the sliding portion 40 is a lid that opens and closes the opening 130b into which the flavor generating article 110 is inserted, for example, the open/closed state of the lid can be detected by the sensor 72. In the example shown in fig. 9, the sensor 72 is a Hall sensor, which is a type of magnetic detecting element, and is

disposed inside the bottom wall portion 133a of the main body portion 130, and is configured to detect the magnetism of the first magnet 81 when the sliding portion 40 is located in the second position (open position). The sensor 72 may be positioned freely, and may be configured to detect the magnetism of the second magnet 82 when the sliding portion 40 is located in the first position or the second position. Furthermore, the flavor inhaler 120 may equally have a plurality of sensors 72, and the plurality of sensors 72 may detect the position of each of the first magnet 81 and the second magnet 82.

[0100] Fig. 11 is a bottom view of the sliding portion 40 with the bottom member 60 removed. In fig. 11, the fixed member 90 is also shown in order to facilitate understanding of the positional relationship between the fixed member 90 and the sliding portion 40. As shown in fig. 11, the sliding portion 40 preferably has contacting portions 57a, 57b that come into contact with the fixed member 90 in the first position (closed position) or the second position (open position). In this case, when the sliding portion 40 slides between the first position and the second position as a result of a user operation, the fixed member 90 and the contacting portions 57a, 57b come into contact with one another, thereby imparting a click sensation to the user and allowing an improvement in operability. Specifically, the click sensation allows the user to feel that the sliding portion 40 has opened or closed. Furthermore, by providing the sliding portion 40 with the contacting portions 57a, 57b that are different from the first magnet 81 and the second magnet 82, it is possible to suppress the occurrence of damage or displacement of the first magnet 81 and the second magnet 82 resulting from the first magnet 81 and the second magnet 82 coming into contact with the fixed member 90. In the example shown in fig. 11, the contacting portions 57a contact the fixed member 90 in the first direction d1 when the sliding portion 40 is in the first position, and the contacting portions 57b contact the fixed member 90 in the first direction d1 when the sliding portion 40 is in the second position. Furthermore, in the example shown in fig. 11, the contacting portions 57a, 57b are provided in the top member 50, but the contacting portions 57a and/or the contacting portions 57b may equally be provided in the bottom member 60.

[0101] Alternatively, the first magnet 81 may be configured to contact the fixed member 90 when the sliding portion 40 is in the first position (closed position) and the second magnet 82 may be configured to contact the fixed member 90 when the sliding portion 40 is in the second position (open position). In this case, when the sliding portion 40 slides between the first position and the second position, the fixed member 90 comes into contact with the first magnet 81 or the second magnet 82, thereby imparting a click sensation to the user and allowing an improvement in operability. Furthermore, since the first magnet 81 and the second magnet 82 function as contacting members that come into contact with the fixed member 90, an increase in the number of components can be suppressed.

[0102] As shown in fig. 11, the fixed member 90 preferably extends in the third direction (Y-axis direction) perpendicular to both the first direction d1 and the second direction d2 (Z-axis direction) connecting the internal space 130a and the sliding portion 40. In this case, since the fixed member 90 does not extend into the internal space 130a of the main body portion 130, an increase in the size of the main body portion 130 can be suppressed. Furthermore, since the fixed member 90 does not extend in the direction (first direction d1) in which the first magnet 81 and the second magnet 82 are arranged, an unnecessary increase in the length of the sliding portion 40 in the first direction d1 can be suppressed. Furthermore, as shown in fig. 11, the fixed member 90 preferably extends to a length exceeding the width of the sliding portion 40 in the third direction (Y-axis direction). In this case, since the fixed member 90 has sufficient length, it can fully receive the attractive forces of the first magnet 81 and the second magnet 82, and the sliding portion 40 can be stably fixed at the first position or the second position. Furthermore, in this case, since both ends of the fixed member 90 may protrude from the sliding portion 40, both ends of the fixed member 90 can be stably fixed to the main body portion 130.

[0103] As shown in fig. 11, the first magnet 81 has a third end 81c facing the fixed member 90 and a fourth end 81d opposite to the third end 81c. Similarly, the second magnet 82 has a third end 82c facing the fixed member 90 and a fourth end 82d opposite to the third end 82c. Here, the sliding portion 40 preferably has a stopper portion 55a, 55b that contacts the third end 81c, 82c of the first magnet 81 and/or the second magnet 82. If positioning is effected by means of an arbitrary stopper portion at the fourth end 81d of the first magnet 81 or the fourth end 82d of the second magnet 82, variations in the distance to the fixed member 90 may occur depending on the dimensional tolerances of the first magnet 81 or the second magnet 82. In contrast, by positioning the first magnet 81 and/or the second magnet 82 using the stopper portion 55a, 55b at the third end 81c, 82c of the first magnet 81 and/or the second magnet 82, as shown in fig. 11, it is possible to suppress variations in the distance to the fixed member 90. Furthermore, since the third end 81c, 82c facing the fixed member 90 contacts the stopper portion 55a, 55b, it is possible to prevent the first magnet 81 and/or the second magnet 82 from moving toward the fixed member 90 even if the first magnet 81 and/or the second magnet 82 exerts an attractive force on the fixed member 90. In the example shown in fig. 11, the sliding portion 40 has a stopper portion 55a that contacts the third end 81c of the first magnet 81 and a stopper portion 55b that contacts the third end 82c of the second magnet 82. Furthermore, in the example shown in fig.

11, the stopper portion 55a and the stopper portion 55b are provided on the top member 50, but the stopper portion 55a and/or the stopper portion 55b may be provided on the bottom member 60.

[0104] Meanwhile, the sliding portion 40 preferably has a space S1 that opens the fourth end 81d, 82d of the first magnet 81 and/or the second magnet 82. If the third end 81c, 82c and the fourth end 81d, 82d of the first magnet 81 or the second magnet 82 are fixed to the sliding portion 40 so as to be sandwiched thereby, variations in the positions thereof may occur depending on the dimensional tolerances of the first magnet 81 or the second magnet 82. In contrast, by having the fourth end 81d, 82d of the first magnet 81 and/or the second magnet 82 open, as shown in fig. 11, the position of the first magnet 81 and/or the second magnet 82 is determined only by the stopper portion 55a, 55g, making it possible to suppress variations in the distance to the fixed member 90.

[0105] The first magnet 81 and the second magnet 82 each have magnetic poles (N pole and S pole). Here, the N and S poles of the first magnet 81 and the second magnet 82 may be arranged in any orientation. Specifically, the first magnet 81 may be disposed such that the N pole and S pole are aligned along the first direction d1, the second direction d2 or the third direction (Y-axis direction). Similarly, the second magnet 82 may be disposed such that the N pole and S pole are aligned along the first direction d1, the second direction d2 or the third direction (Y-axis direction). The first magnet 81 and the second magnet 82 may also be disposed such that their respective N and S poles are aligned in the same direction, or may be disposed such that their poles are aligned in mutually different directions. That is, the first magnet 81 and the second magnet 82 may be disposed in any orientation that allows an attractive force on the fixed member 90 to be generated.

[0106] If the first magnet 81 and/or the second magnet 82 are disposed such that their N and S poles are aligned along the first direction d1, i.e. the sliding direction, the magnetic force at the third end 81c of the first magnet 81 and/or the third end 82c of the second magnet 82 can be increased in comparison with a case in which the N and S poles are arranged so as to be aligned along the second direction d2 or the third direction (Y axis). Therefore, in this case, even if the first magnet 81 and/or the second magnet 82 is reduced in size, a relatively large attractive force can be generated on the fixed member 90, allowing the sliding portion 40 to be made compact. Furthermore, the orientation of the magnetic field that passes through the sensor 72 changes depending on the orientation of the first magnet 81 or the second magnet 82. Therefore, the type or orientation of the sensor 72 can be set as appropriate in accordance with the orientation of the first magnet 81 or the second magnet 82. In other words, the orientation of the first magnet 81 or the second magnet 82 and the alignment of the N and S poles may be set, as appropriate, in accordance with the type or orientation of the sensor 72.

[0107] Embodiments of the present invention have been described above, but the present invention is not limited to those embodiments, and various modifications are possible within the scope of the technical concept disclosed in the claims, specification and drawings. Moreover, any shape or material not directly stated in the specification or drawings is also within the scope of the technical concept of the invention of the present application, provided that it exhibits the action and effect of the invention of the present application.

[0108] A number of aspects disclosed in the present specification are given below.

(1) A flavor inhaler including a main body portion having an internal space, and
a sliding portion that is attached so as to be capable of sliding relative to the main body portion along a first direction between a first position and a second position, wherein:

the main body portion has a fixed member for attaching the sliding portion to the main body portion;
the sliding portion has elongated holes extending in the first direction; and
the fixed member is disposed so as to penetrate through the elongated holes toward a third direction perpendicular to both the first direction and a second direction connecting the internal space of the main body portion and the sliding portion.

(2) The flavor inhaler according to (1), wherein:

the sliding portion has a bottom portion located on the internal space side, a top portion facing the bottom portion, and side portions located between the bottom portion and the top portion and extending in the first direction;
the elongated holes are formed in the side portions; and
the top portion and the side portions are molded integrally.

(3) The flavor inhaler according to (1) or (2), wherein
the sliding portion has a bottom member located on the internal space side and a top member configured to cover the bottom member.
(4) The flavor inhaler according to (3), wherein
the bottom member is disposed between the main body portion and the fixed member.
(5) The flavor inhaler according to (3) or (4), wherein:

the top member has a first end surface facing the internal space of the main body portion; and
the first end surface is disposed so as to be spaced apart from the main body portion.

(6) The flavor inhaler according to any one of (3) to (5), wherein
the bottom member is disposed so as to be capable of coming into contact with the fixed member.
(7) The flavor inhaler according to any one of (3) to (6), wherein:

the bottom member has a first surface located on the internal space side and first projecting portions provided on the first surface; and
the bottom member contacts the main body portion via the first projecting portions.

(8) The flavor inhaler according to any one of (3) to (7), wherein:

the bottom member has a second surface that extends in the first direction and the second direction and second projecting portions provided on the second surface; and
the bottom member contacts the main body portion via the second projecting portions.

(9) The flavor inhaler according to any one of (1) to (8), wherein:

the fixed member has a first edge portion facing the internal space side and a second edge portion opposite to the first edge portion; and
the second edge portion is disposed so as not to contact the sliding portion.

(10) The flavor inhaler according to any one of (1) to (9), wherein:

the main body portion has a through-hole; and
the fixed member is rod-shaped and is fixed to the main body portion by being passed through the through-hole.

(11) The flavor inhaler according to (10), wherein:

the main body portion has a recessed portion; and
one end of the fixed member is fixed to the main body portion by being accommodated in the recessed portion.

(12) The flavor inhaler according to (10) or (11), wherein:

the main body portion has a housing that defines the internal space and a wall portion that defines the through-hole; and
the wall portion is molded integrally with the housing.

(13) The flavor inhaler according to any one of (10) to (12), wherein
the through-hole does not communicate with the internal space of the main body portion.
(14) The flavor inhaler according to any one of (10) to (13), including
a panel covering the through-hole so that the through-hole is not visible from the outside.
(15) The flavor inhaler according to any one of (10) to (14), wherein:

the fixed member has a first part that can pass through the through-hole and a second part that cannot pass through the through-hole; and
the first part is disposed so as to penetrate through the elongated holes of the sliding portion.

(16) The flavor inhaler according to any one of (1) to (15), wherein:

the sliding portion has edge portions that define the elongated holes; and
the fixed member is spaced apart from the edge portions when the sliding portion slides in the first direction.

(17) The flavor inhaler according to any one of (1) to (16), wherein:

the sliding portion has a front end portion and a rear end portion that face one another in the first direction; and
the front end portion and the rear end portion are configured so as not to be in contact with the main body portion when the sliding portion is located in the first position or the second position.

(18) The flavor inhaler according to any one of (1) to (17), wherein:

the main body portion has an opening through which a flavor generating article can be inserted;
the first position is a closed position in which the opening is covered; and
the second position is an open position in which the opening is open.

REFERENCE SIGNS LIST

[0109]

40: Sliding portion
40a: Front end portion
40b: Rear end portion
41: Elongated hole
41a: Edge portion
42: Bottom portion
43: Top portion
44: Side portion
50: Top member
54: First end surface
60: Bottom member
61: Second surface
62: Second projecting portion
63: First surface
64: First projecting portion
81a: First end
81b: Second end
82a: First end
82b: Second end
90: Fixed member
90a: First part
90b: Second part
91: First edge portion
92: Second edge portion
110: Flavor generating article
120: Flavor inhaler
130: Main body portion
130a: Internal space
130b: Opening
131: Housing
132: Panel
133: Recessed portion
134: Through-hole
135: Recessed portion
136: Wall portion
S1: Space
d1: First direction
d2: Second direction

Claims

1. A flavor inhaler including a main body portion having an internal space, and
a sliding portion that is attached so as to be capable of sliding relative to the main body portion along a first direction between a first position and a second position, wherein:

the main body portion has a fixed member for attaching the sliding portion to the main body portion;
the sliding portion has elongated holes extending in the first direction; and
the fixed member is disposed so as to penetrate through the elongated holes toward a third direction perpendicular to both the first direction and a second direction connecting the internal space of the main body portion and the sliding portion.

2. The flavor inhaler as claimed in claim 1, wherein:

the sliding portion has a bottom portion located on the internal space side, a top portion facing the bottom portion, and side portions located between the bottom portion and the top portion and extending in the first direction;
the elongated holes are formed in the side portions; and
the top portion and the side portions are molded integrally.

3. The flavor inhaler as claimed in claim 1 or 2, wherein
the sliding portion has a bottom member located on the internal space side and a top member configured to cover the bottom member.

4. The flavor inhaler as claimed in claim 3, wherein
the bottom member is disposed between the main body portion and the fixed member.

5. The flavor inhaler as claimed in claim 3 or 4, wherein:

the top member has a first end surface facing the internal space of the main body portion; and
the first end surface is disposed so as to be spaced apart from the main body portion.

6. The flavor inhaler as claimed in any one of claims 3 to 5, wherein
the bottom member is disposed so as to be capable of coming into contact with the fixed member.

7. The flavor inhaler as claimed in any one of claims 3 to 6, wherein:

the bottom member has a first surface located on the internal space side and first projecting portions provided on the first surface; and
the bottom member contacts the main body portion via the first projecting portions.

8. The flavor inhaler as claimed in any one of claims 3 to 7, wherein:

the bottom member has a second surface that extends in the first direction and the second direction and second projecting portions pro-

vided on the second surface; and
the bottom member contacts the main body portion via the second projecting portions.

9. The flavor inhaler as claimed in any one of claims 1 to 8, wherein:

the fixed member has a first edge portion facing the internal space side and a second edge portion opposite to the first edge portion; and
the second edge portion is disposed so as not to contact the sliding portion.

10. The flavor inhaler as claimed in any one of claims 1 to 9, wherein:

the main body portion has a through-hole; and
the fixed member is rod-shaped and is fixed to the main body portion by being passed through the through-hole.

11. The flavor inhaler as claimed in claim 10, wherein:

the main body portion has a recessed portion; and
one end of the fixed member is fixed to the main body portion by being accommodated in the recessed portion.

12. The flavor inhaler as claimed in claim 10 or 11, wherein:

the main body portion has a housing that defines the internal space and a wall portion that defines the through-hole; and
the wall portion is molded integrally with the housing.

13. The flavor inhaler as claimed in any one of claims 10 to 12, wherein
the through-hole does not communicate with the internal space of the main body portion.

14. The flavor inhaler as claimed in any one of claims 10 to 13, including a panel covering the through-hole so that the through-hole is not visible from the outside.

15. The flavor inhaler as claimed in any one of claims 10 to 14, wherein:

the fixed member has a first part that can pass through the through-hole and a second part that cannot pass through the through-hole; and
the first part is disposed so as to penetrate through the elongated holes of the sliding portion.

16. The flavor inhaler as claimed in any one of claims 1 to 15, wherein:

the sliding portion has edge portions that define the elongated holes; and
the fixed member is spaced apart from the edge portions when the sliding portion slides in the first direction.

17. The flavor inhaler as claimed in any one of claims 1 to 16, wherein:

the sliding portion has a front end portion and a rear end portion that face one another in the first direction; and
the front end portion and the rear end portion are configured so as not to be in contact with the main body portion when the sliding portion is located in the first position or the second position.

18. The flavor inhaler as claimed in any one of claims 1 to 17, wherein:

the main body portion has an opening through which a flavor generating article can be inserted;
the first position is a closed position in which the opening is covered; and
the second position is an open position in which the opening is open.

Figure 1

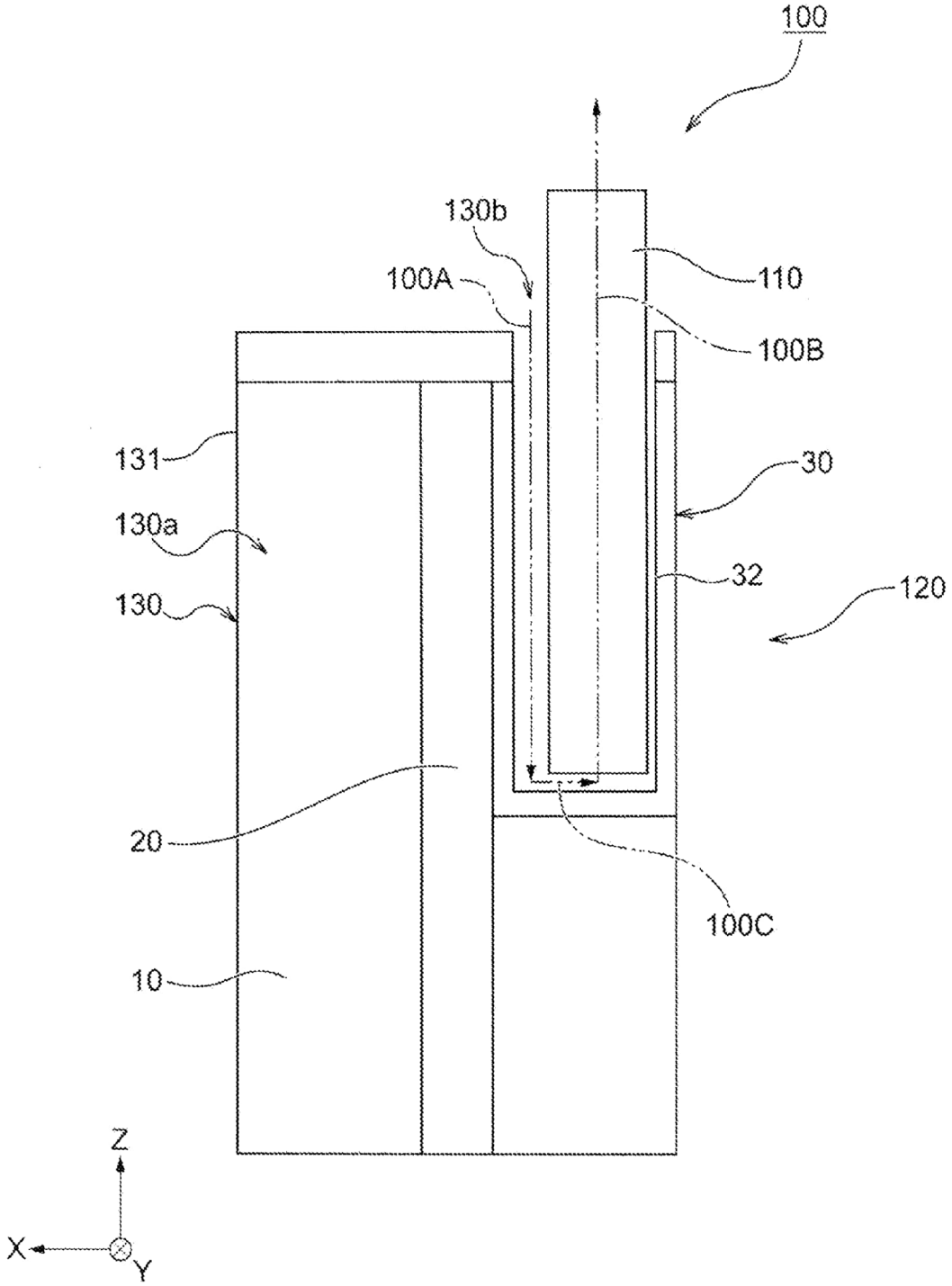

Figure 2

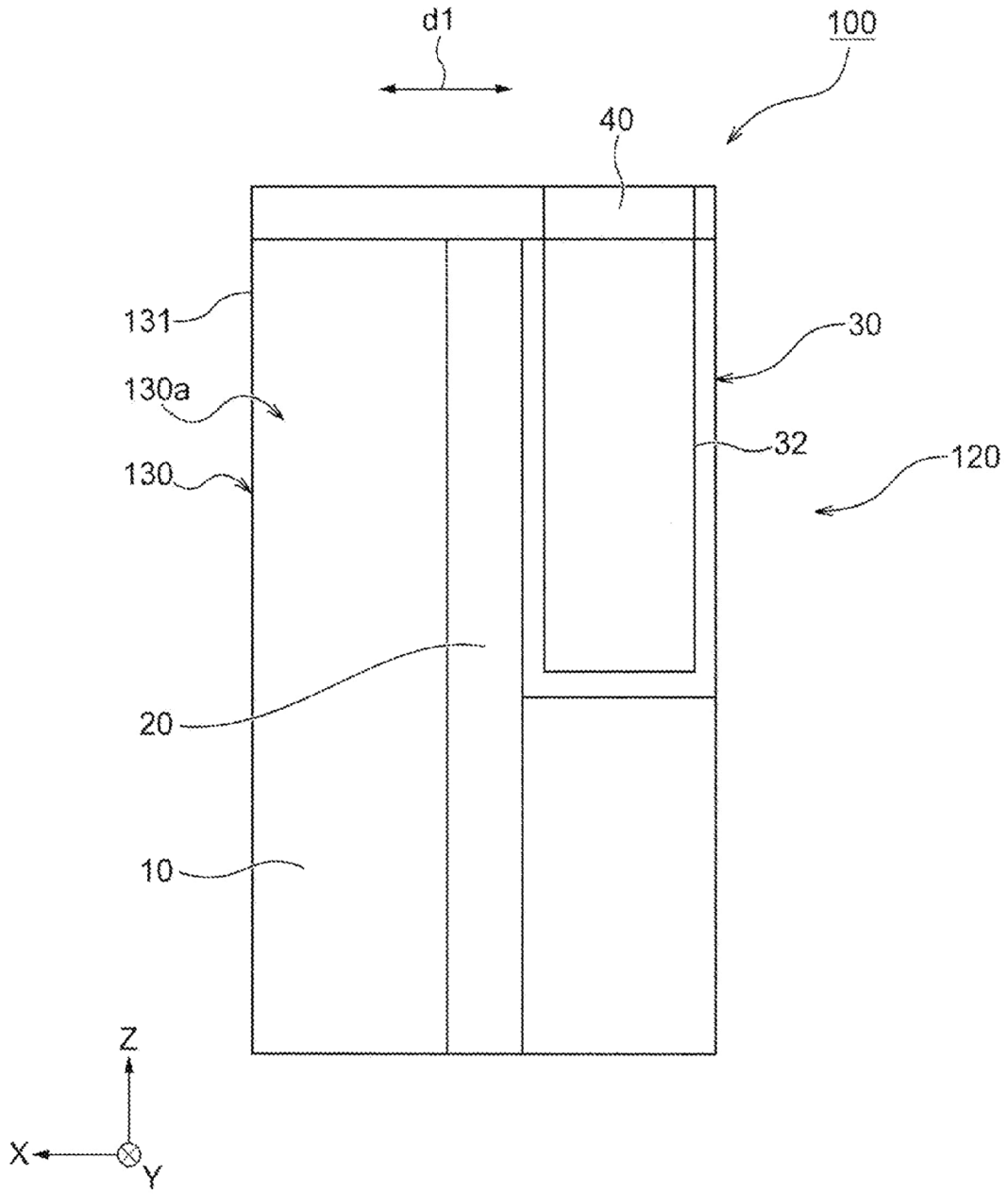

Figure 3

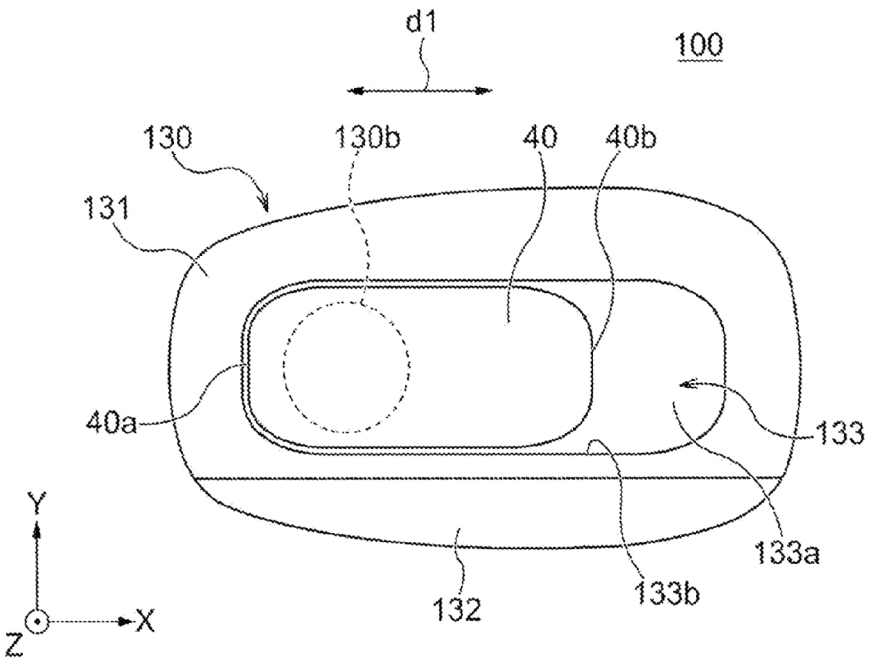

Figure 4

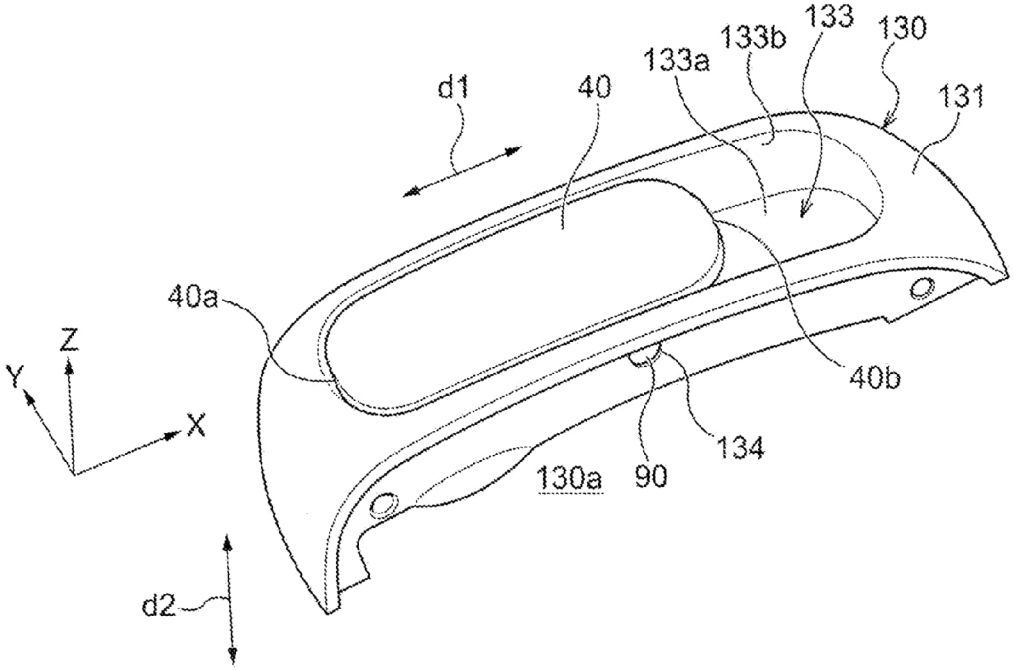

Figure 5

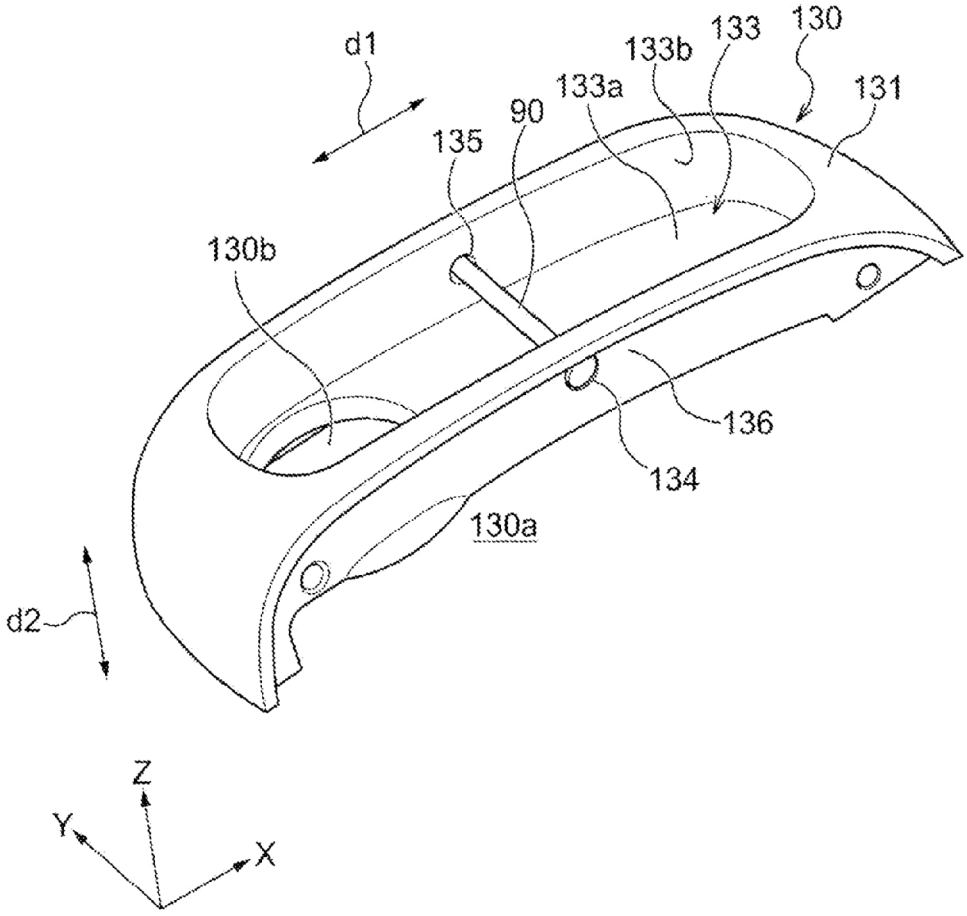

Figure 6

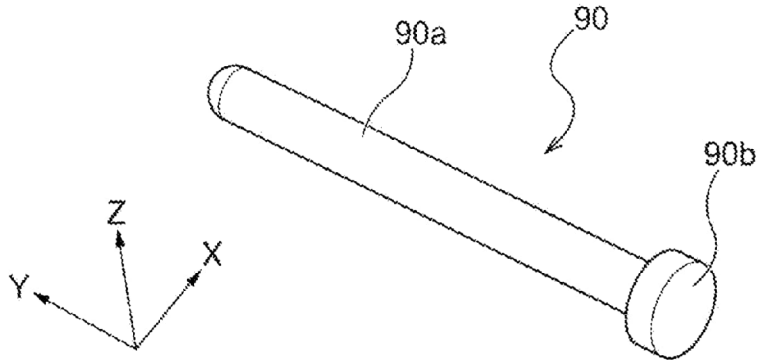

Figure 7

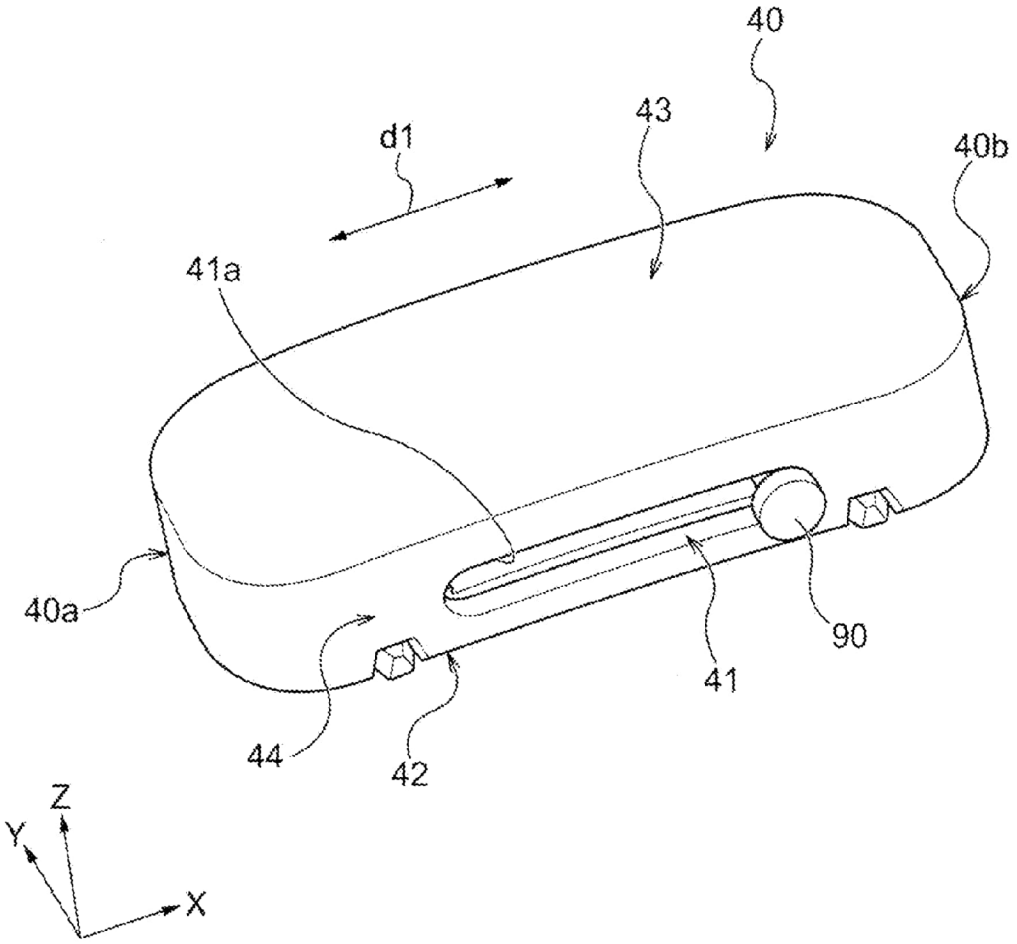

Figure 8

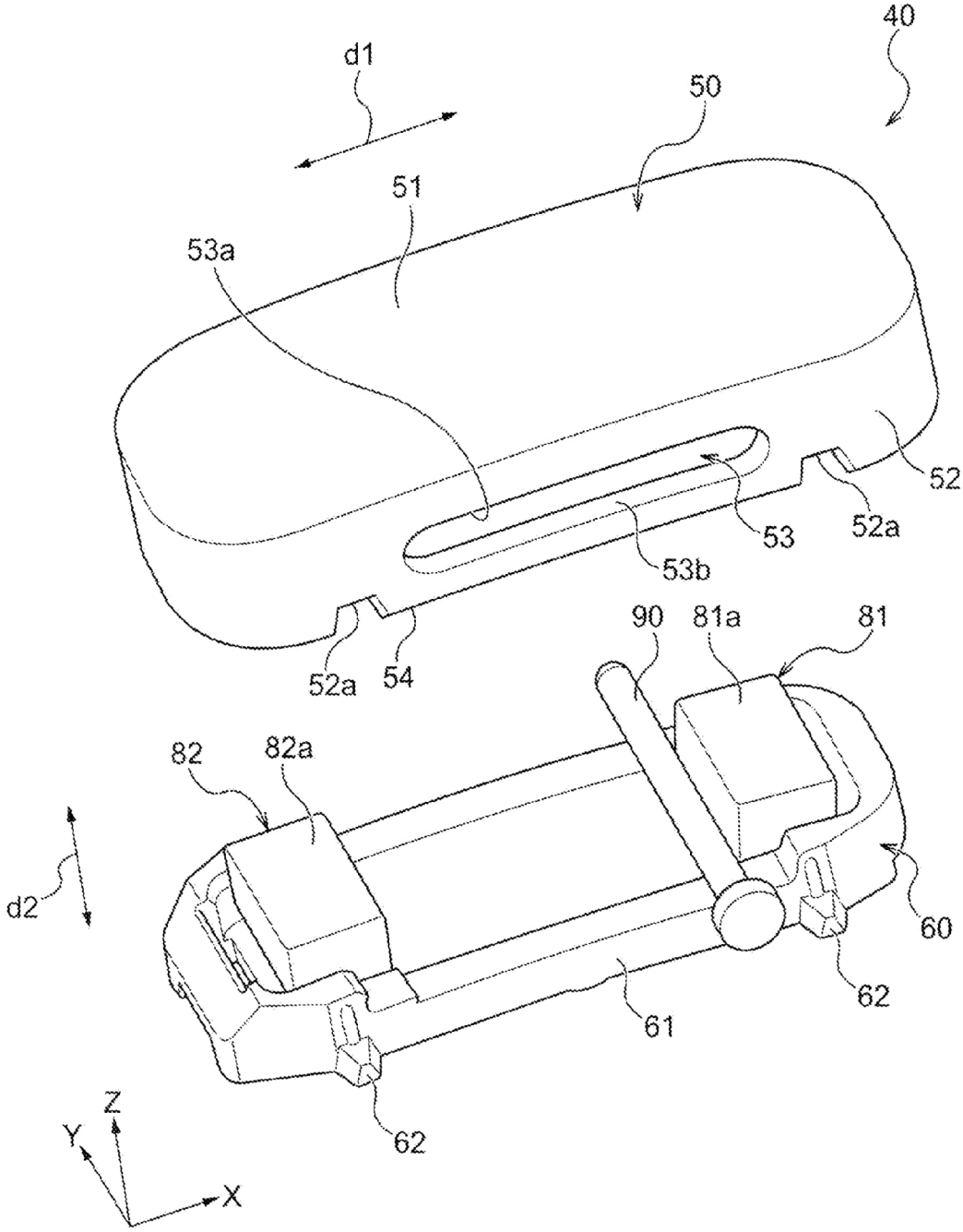
40
d1
50
51
53a
52
52a
53
53b
52a
54
90
81a
81
82
82a
d2
60
62
61
62
Z
Y
X

Figure 9

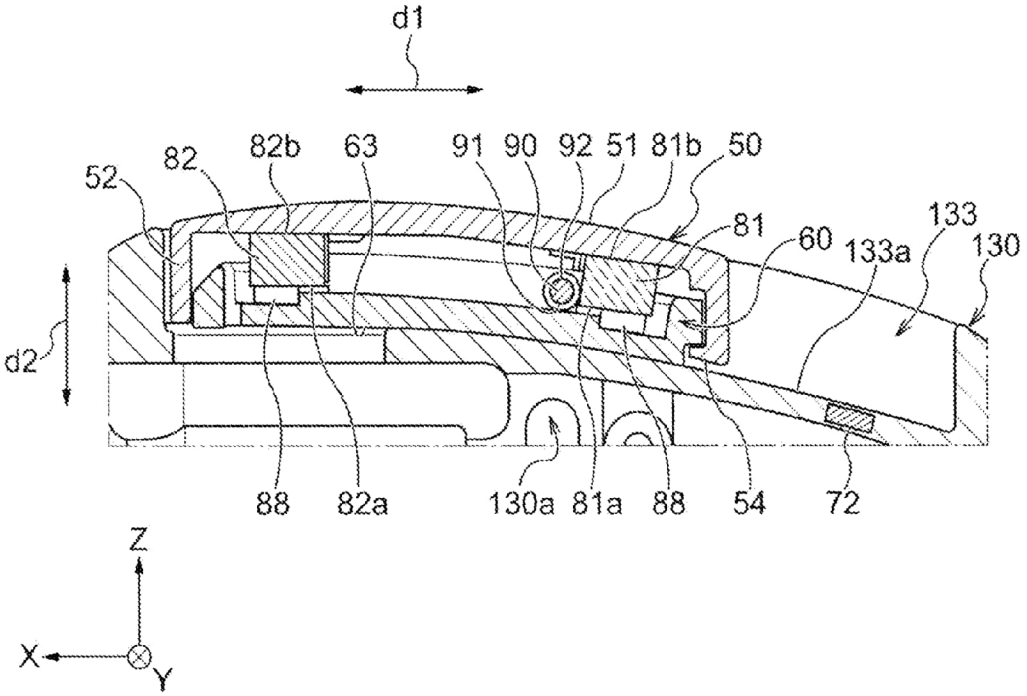

Figure 10

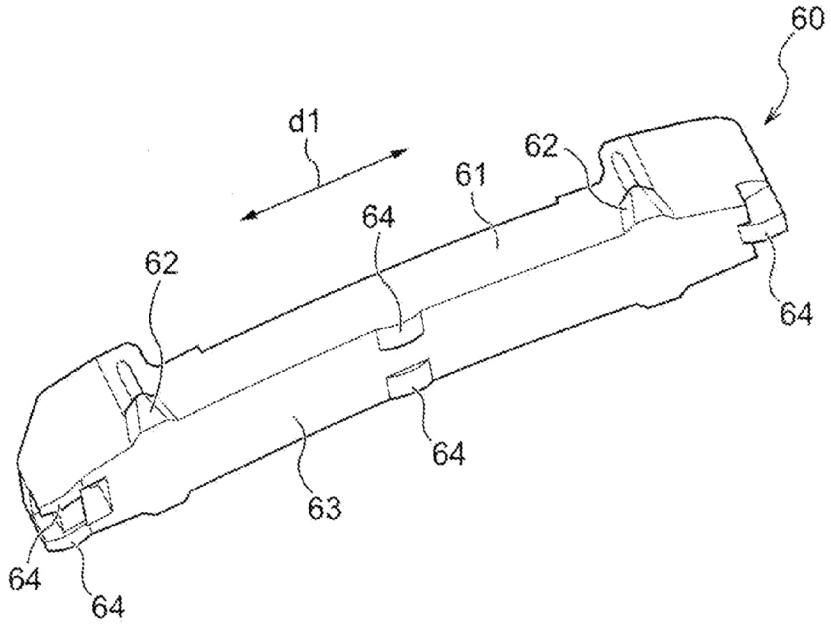

Figure 11

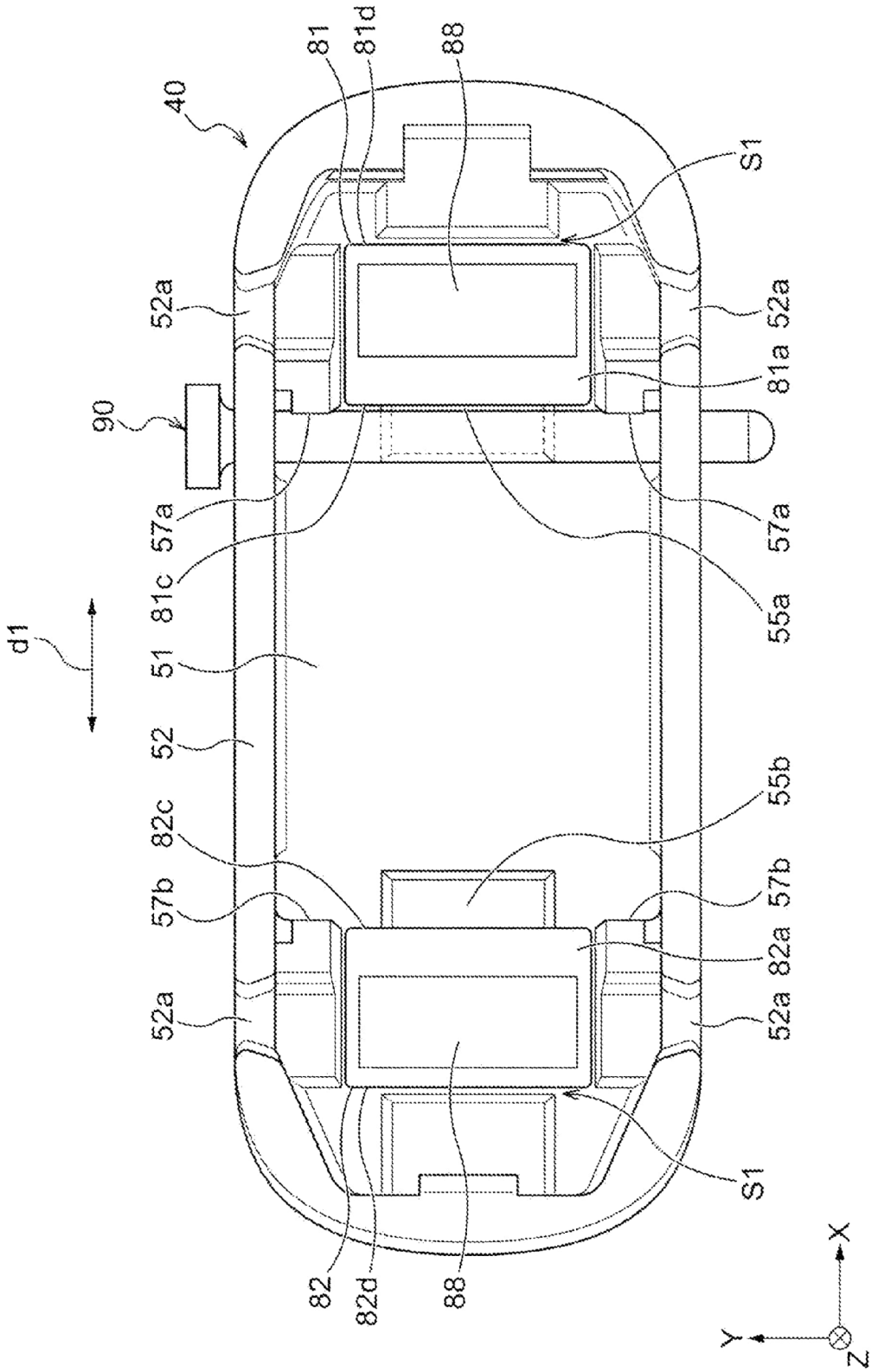
40
81
81d
88
S1
52a
52a
81a
90
57a
57a
81c
55a
d1
51
52
55b
82c
57b
57b
82a
52a
52a
S1
82
82d
88
X
Y
Z

INTERNATIONAL SEARCH REPORT

International application No.
PCT/JP2023/044551

A. CLASSIFICATION OF SUBJECT MATTER

A24F 40/40(2020.01)i
FI: A24F40/40

According to International Patent Classification (IPC) or to both national classification and IPC

B. FIELDS SEARCHED

Minimum documentation searched (classification system followed by classification symbols)

A24F40/40

Documentation searched other than minimum documentation to the extent that such documents are included in the fields searched

Published examined utility model applications of Japan 1922-1996
Published unexamined utility model applications of Japan 1971-2024
Registered utility model specifications of Japan 1996-2024
Published registered utility model applications of Japan 1994-2024

Electronic data base consulted during the international search (name of data base and, where practicable, search terms used)

C. DOCUMENTS CONSIDERED TO BE RELEVANT

Category*	Citation of document, with indication, where appropriate, of the relevant passages	Relevant to claim No.
Y	CN 218474042 U (SHENZHEN FIRST UNION TECHNOLOGY CO., LTD.) 14 February 2023 (2023-02-14) paragraphs [0027]-[0046], fig. 1-9	1-9, 16-18
A		10-15
Y	CN 207927769 U (CHINA TOBACCO HUNAN INDUSTRIAL CO., LTD.) 02 October 2018 (2018-10-02) fig. 3-5	1-9, 16-18
Y	JP 2013-517998 A (PHILIP MORRIS PRODUCTS S.A.) 20 May 2013 (2013-05-20) fig. 1-2	1-9, 16-18
A	CN 219249224 U (SHENZHEN MAISHI TECHNOLOGY CO., LTD.) 27 June 2023 (2023-06-27) entire text, all drawings	1-18

☐ Further documents are listed in the continuation of Box C. ☑ See patent family annex.

* Special categories of cited documents:
"A" document defining the general state of the art which is not considered to be of particular relevance
"D" document cited by the applicant in the international application
"E" earlier application or patent but published on or after the international filing date
"L" document which may throw doubts on priority claim(s) or which is cited to establish the publication date of another citation or other special reason (as specified)
"O" document referring to an oral disclosure, use, exhibition or other means
"P" document published prior to the international filing date but later than the priority date claimed

"T" later document published after the international filing date or priority date and not in conflict with the application but cited to understand the principle or theory underlying the invention
"X" document of particular relevance; the claimed invention cannot be considered novel or cannot be considered to involve an inventive step when the document is taken alone
"Y" document of particular relevance; the claimed invention cannot be considered to involve an inventive step when the document is combined with one or more other such documents, such combination being obvious to a person skilled in the art
"&" document member of the same patent family

Date of the actual completion of the international search	Date of mailing of the international search report
12 January 2024	**23 January 2024**
Name and mailing address of the ISA/JP **Japan Patent Office (ISA/JP)** **3-4-3 Kasumigaseki, Chiyoda-ku, Tokyo 100-8915** **Japan**	Authorized officer Telephone No.

Form PCT/ISA/210 (second sheet) (July 2022)

INTERNATIONAL SEARCH REPORT
Information on patent family members

International application No.
PCT/JP2023/044551

Patent document cited in search report	Publication date (day/month/year)	Patent family member(s)	Publication date (day/month/year)
CN 218474042 U	14 February 2023	(Family: none)	
CN 207927769 U	02 October 2018	(Family: none)	
JP 2013-517998 A	20 May 2013	WO 2011/091828 A1 fig. 1-2 EP 2528461 A1 CN 102724889 A KR 10-2012-0113786 A	
CN 219249224 U	27 June 2023	(Family: none)	

Form PCT/ISA/210 (patent family annex) (July 2022)

REFERENCES CITED IN THE DESCRIPTION

This list of references cited by the applicant is for the reader's convenience only. It does not form part of the European patent document. Even though great care has been taken in compiling the references, errors or omissions cannot be excluded and the EPO disclaims all liability in this regard.

Patent documents cited in the description

- JP 2001521123 A **[0003]**
- JP 5963375 B **[0003]**
- WO 2016207407 A1 **[0003]**
- JP 2022527088 A **[0003]**
- JP 2021023137 A **[0003]**