(19) Europäisches Patentamt
European Patent Office
Office européen des brevets

(11) EP 4 825 255 A1

(12) EUROPEAN PATENT APPLICATION
published in accordance with Art. 153(4) EPC

(43) Date of publication:
21.10.2026 Bulletin 2026/43

(21) Application number: **25768517.2**

(22) Date of filing: **18.02.2025**

(51) International Patent Classification (IPC):
A45D 20/12 *(2006.01)*

(52) Cooperative Patent Classification (CPC):
A45D 20/12

(86) International application number:
PCT/KR2025/002316

(87) International publication number:
WO 2025/187993 (11.09.2025 Gazette 2025/37)

(84) Designated Contracting States:
AL AT BE BG CH CY CZ DE DK EE ES FI FR GB GR HR HU IE IS IT LI LT LU LV MC ME MK MT NL NO PL PT RO RS SE SI SK SM TR
Designated Extension States:
BA
Designated Validation States:
GE KH MA MD TN

(30) Priority: **07.03.2024 KR 20240032512**

(71) Applicant: **LG Electronics Inc.**
Yeongdeungpo-gu
Seoul 07336 (KR)

(72) Inventors:
- **LEE, Seongjae**
  Seoul 07796 (KR)
- **AHN, Kwangwoon**
  Seoul 07796 (KR)
- **LIM, Chulhee**
  Seoul 07796 (KR)
- **KIM, Hyoungjun**
  Seoul 07796 (KR)
- **SEO, Minji**
  Seoul 07796 (KR)
- **KIM, Jongchul**
  Seoul 07796 (KR)

(74) Representative: **Ter Meer und Partner mbB**
Nymphenburger Str. 4
Zugang Dachauer Str. 63
80335 München (DE)

(54) HAIRSTYLING NOZZLE AND HAIRDRYER

(57) Disclosed is a hairstyling nozzle coupled to an air discharge portion of a hairdryer, the hairstyling nozzle comprising: a rear coupling portion fastened to the air discharge portion; an air guide extending forwards from the rear coupling portion; a nozzle head positioned in front of the air guide and including nozzle holes through which air is discharged; a lower-end guide positioned to be spaced apart from the lower end of the nozzle head by a predetermined distance and configured to guide air discharged through the nozzle holes to the rear; and a central guide positioned between the lower-end guide and the nozzle head so as to widen in the backward direction. The hairstyling nozzle guides air so as to flow in the downward direction such that hair is forced against the scalp, thereby effectively implementing the desired style.

Fig. 17

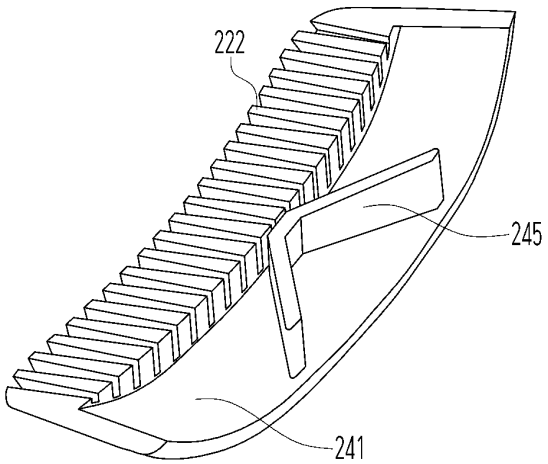

EP 4 825 255 A1

Description

[Technical Field]

[0001] The present disclosure relates to a hair styling nozzle for fixing a shape of hair and a hair dryer including the same.

[Background]

[0002] When reflowing moisture from human hair in a wet state as desired or styling the human hair from a current shape into a desired shape, a hair dryer that discharges gas through an air outlet may be used.

[0003] A fan unit or the like for flowing gas may be embedded in the hair dryer, and the hair dryer including such an internal configuration may be designed so that a user may conveniently use the hair dryer in consideration of its own weight and the like.

[0004] When a heater module is located in a head portion and a temperature of a case also increases due to heat of the heater module, there may be a risk of burns, and internal components such as a controller may be affected. Therefore, a structure is needed in which the heat of the heater module is not transferred to the outside or to other locations, but is entirely transferred to air passing through an airflow path.

[0005] In particular, in order to use the hair dryer wirelessly, a battery needs to be embedded, a space for mounting the battery in the hair dryer needs to be additionally secured, and components such as an ion generator may be additionally provided for functional expansion.

[0006] The hair dryer may be used for hair styling in addition to drying hair. In order to perform hair styling, a separate tool such as a hair brush or a hair iron that applies heat is needed, or professional skill is needed, and thus it is difficult to directly perform highly satisfactory styling at home.

[0007] Various types of accessories for expanding functions of the hair dryer are being developed so that hair styling may be performed more easily even at home.

[Summary]

[Technical Purpose]

[0008] A purpose of the present disclosure is to provide a hair styling nozzle and a hair dryer including the same, which enable down perm styling for bringing hair above an ear into close contact with a scalp to be easily performed at home.

[Technical Solutions]

[0009] Provided is a hair styling nozzle coupled to an air outlet of a hair dryer, the hair styling nozzle including: a rear coupling portion fastened to the air outlet; an air guide extending in a frontward direction from the rear coupling portion; a nozzle head located in front of the air guide and including a nozzle hole through which air is discharged; a lower end guide located spaced apart by a predetermined distance from a lower end of the nozzle head and guiding air discharged from the nozzle hole in a rearward direction; and a center guide disposed between the lower end guide and the nozzle head and having a width increasing as the center guide extends in a rearward direction.

[0010] The center guide may be located at a center in a horizontal direction of the nozzle head and may have a left-right symmetrical shape.

[0011] The center guide may include a pair of inclined surfaces extending from a central portion respectively toward opposite sides in the horizontal direction as the center guide extends in the rearward direction, and an angle between the pair of inclined surfaces may have a value of 120 degrees or greater and 160 degrees or smaller.

[0012] A horizontal width of a rear end of the center guide may be 30 mm or greater and smaller than a width of the lower end guide.

[0013] The lower end guide may extends rearward so as to form an inclined surface inclined downward, wherein the center guide may have a vertical length increasing as the center guide extends toward a rear end thereof..

[0014] The nozzle head may include a nozzle hole through which air discharged from the air outlet is discharged, and a plurality of vertical ribs protruding in a frontward direction from a front surface thereof, extending in a vertical direction, and guiding air discharged from the nozzle hole in a downward direction.

[0015] A front end of the center guide may extend from a rear surface of a lower end of the vertical rib.

[0016] Provided is a hair dryer including a hair dryer main body including a ring-shaped air outlet, and a hair styling nozzle coupled to the air outlet, wherein the hair styling nozzle includes: a rear coupling portion fastened to the air outlet; an air guide extending in a frontward direction from the rear coupling portion; a nozzle head located in front of the air guide and including a nozzle hole through which air is discharged; a lower end guide located spaced apart by a predetermined distance from a lower end of the nozzle head and guiding air discharged from the nozzle hole in a rearward direction; and a center guide disposed between the lower end guide and the nozzle head and having a width increasing as the center guide extends in a rearward direction.

[Advantageous Effects]

[0017] The hair styling nozzle of the present disclosure guides air to flow downward, thereby effectively implementing a style in which hair is in close contact with a scalp.

[0018] In addition, the hair styling nozzle of the present disclosure may prevent hot air from being directly applied to an ear, thereby preventing burns caused by hot air.

[0019] In addition, in the hair styling nozzle of the present disclosure, hot air is not transferred to a hand holding a handle, thereby improving usability.

[0020] The effects obtainable from the present disclosure are not limited to the effects mentioned above, and other effects not mentioned will be clearly understood by those skilled in the art from the following description.

[Brief Description of the Drawings]

[0021]

FIG. 1 is a front perspective view illustrating a hair dryer according to an embodiment of the present disclosure.

FIG. 2 is a rear perspective view illustrating the hair dryer according to an embodiment of the present disclosure.

FIG. 3 is a cross-sectional view illustrating an inside of the hair dryer according to an embodiment of the present disclosure.

FIG. 4 is a front perspective view illustrating a hair styling nozzle according to a first embodiment of the present disclosure.

FIG. 5 is a rear perspective view illustrating the hair styling nozzle according to the first embodiment of the present disclosure.

FIG. 6 is a horizontal cross-sectional view illustrating the hair styling nozzle according to the first embodiment of the present disclosure.

FIG. 7 is a vertical cross-sectional view illustrating the hair styling nozzle according to the first embodiment of the present disclosure.

FIGS. 8 and 9 are views illustrating flows of air according to a size of a second nozzle hole of the hair styling nozzle according to the first embodiment of the present disclosure.

FIG. 10 is a view illustrating a use aspect of the hair styling nozzle of the present disclosure.

FIG. 11 is a front perspective view illustrating a hair styling nozzle according to a second embodiment of the present disclosure.

FIG. 12 is a view illustrating a flow of air in the hair styling nozzle according to the second embodiment of the present disclosure.

FIG. 13 is a view illustrating a flow of air in a hair styling nozzle according to a third embodiment of the present disclosure.

FIG. 14 is a view illustrating a flow of air in the hair styling nozzle according to the first embodiment of the present disclosure.

FIG. 15 is a view illustrating a flow of air in a hair styling nozzle according to a fourth embodiment of the present disclosure.

FIG. 16 is a view illustrating a state in which the hair styling nozzle according to the first embodiment of the present disclosure is coupled to a hair dryer main body.

FIG. 17 is a cross-sectional view illustrating the hair styling nozzle according to the first embodiment of the present disclosure.

FIG. 18 is a view illustrating flows of air according to presence or absence of a center guide of the hair styling nozzle of the present disclosure.

FIGS. 19 to 21 are views illustrating flows of air according to a size of the center guide of the hair styling nozzle of the present disclosure.

[Best Mode]

[0022] Hereinafter, an embodiment of the present disclosure will be described in detail with reference to the accompanying drawings to be easily implemented by those skilled in the art to which the present disclosure belongs.

[0023] However, the present disclosure may be implemented in many different forms and is not limited to embodiments described herein. In addition, in order to clearly describe the present disclosure, components irrelevant to the description are omitted, and like reference numerals are assigned to similar components throughout the specification.

[0024] In this specification, duplicate descriptions of the same components are omitted.

[0025] Further, in this specification, it will be understood that when a component is referred to as being "connected with" another component, the component may be directly connected with the other component or intervening components may also be present. In contrast, it will be understood that when a component is referred to as being "directly connected with" another component in this specification, there are no intervening components present.

[0026] Further, in this specification, the terminology used herein is for the purpose of describing a specific embodiment only and is not intended to be limiting of the present disclosure.

[0027] Further, in this specification, the singular forms "a" and "an" are intended to include the plural forms as well, unless the context clearly indicates otherwise.

[0028] Further, in this specification, it will be further understood that the terms "comprises," "comprising," "includes," and "including" specify the presence of certain features, numbers, steps, operations, elements, and parts or combinations thereof, but do not preclude the presence or addition of one or more other features, numbers, steps, operations, elements, and parts or combinations thereof.

[0029] Further, in this specification, the term "and/or" includes a combination of a plurality of listed items or

one of the plurality of listed items. In this specification, "A or B" may include "A," "B," or "both A and B."

[0030] The present disclosure relates to a portable device capable of being used handheld by a user and, more particularly, to an electronic device that is small in size and designed to be used handheld by a user. Since the portable device is not used in a stationary position but rather is held and used directly by the user, the portable device needs to be lightweight, and grip comfort of a handle 102 is important. Additionally, because the portable device is prone to contamination from external substances, a waterproof feature may be necessary. It is necessary to seal a gap between a case and a frame so that internal air is not discharged to a region other than an air outlet.

[0031] The portable device of the present disclosure relates to beauty devices. For example, the portable device relates to a hair dryer 100. While the present disclosure is described based on the hair dryer 100, the present disclosure is not limited thereto. Portable devices such as handheld skincare devices or body care devices may also be included in the scope of the present disclosure.

[0032] FIG. 1 is a front perspective view of the hair dryer 100 according to an embodiment of the present disclosure. FIG. 2 is a rear perspective view of the hair dryer 100 according to an embodiment of the present disclosure. FIG. 3 is a cross-sectional view of the hair dryer 100 according to an embodiment of the present disclosure, taken along line A-A of FIG. 2.

[0033] In the drawings, the x-axis represents the left-right direction, the y-axis represents the front-rear direction, and the z-axis represents the up-down direction. When viewed from the front, +x is to the right, and -x is to the left. Further, +y is a frontward direction, -y is a rearward direction, +z is an upward direction, and -z is a downward direction.

[0034] The hair dryer 100 according to an embodiment of the present disclosure includes a main body including a head portion 101 and a handle portion 102. The handle portion 102 includes, at a lower portion thereof, an air inlet 104 through which air is introduced from the outside, and the head portion 101 includes an air outlet 103 through which air is discharged, a heater module 150, and a touch display 135 on a rear surface.

[0035] An inside of the main body 101 and 102 of the hair dryer 100 includes an airflow path extending from the air inlet 104 to the air outlet 103. The airflow path of the present disclosure is not a straight path. Specifically, as shown in FIG. 3, air in the airflow path flows vertically in the handle portion 102 and then bends horizontally in the head portion 101.

[0036] The air inlet 104 may be located at the lower portion of the handle portion 102, and the air outlet 103 may be located at a front of the head portion 101. The handle portion 102 and the head portion 101 may have shapes corresponding to a direction in which the airflow path extends. For usability, the handle portion 102 may extend in a direction slightly tilted in a frontward direction from a vertical direction with respect to the head portion 101.

[0037] The handle portion 102 may be formed in a cylindrical shape with a diameter that may be gripped by the user, and the head portion 101 may be formed in a cylindrical shape with a diameter greater than that of the handle portion 102. The diameter of the handle portion 102 may be uniform from the bottom to the top, but the head portion 101 may have a slightly smaller diameter at the front to guide air toward the air outlet 103.

[0038] The air inlet 104 may include air intake holes 1283 formed around a circumference of the handle portion 102 and a filter to prevent introduction of other foreign substances such as dust. A filter frame to which the filter is fixed may be located at a lower portion of the handle portion 102 and may constitute the air inlet 104.

[0039] The filter is made of a material different from that of cases 111 and 121 forming an exterior of the hair dryer 100 and is a thin film-shaped member, and thus may be damaged by an external impact. Therefore, a filter cover 128 for protecting the filter may be further included, and the filter cover 128 may be configured to be detachable for cleaning and replacement of the filter.

[0040] The air outlet 103 may be located at the front of the head portion 101 and may include a ring-shaped opening. As illustrated in FIG. 3, a heating wire 156 of the heater module 150 of the present disclosure has a donut shape in which a central portion is empty and is wound around a cylindrical heater housing 158. The air outlet 103 may also have a ring shape corresponding to the arrangement of the heating wire 156. That is, a center of the air outlet 103 may be blocked to form the ring shape.

[0041] A hair styling nozzle 200 coupled to the air outlet 103 may be further included to expand functions of the hair dryer 100. The hair styling nozzle 200 may be easily detachably implemented through a magnet located at a central portion of the air outlet 103.

[0042] FIG. 4 is a front perspective view of the hair styling nozzle 200 according to the first embodiment of the present disclosure, and FIG. 5 is a rear perspective view of the hair styling nozzle 200 according to the first embodiment of the present disclosure. The hair styling nozzle 200 of the present disclosure is a hair styling nozzle 200 for pressing and fixing side hair above an ear in a short hair style. A styling method of bringing hair protruding in a vertical direction from hair roots above the ear into close contact with a scalp direction is commonly called down perm styling.

[0043] Down perm styling may be performed in a beauty salon using a perm agent, but there is a problem that, after a certain period of time, hair may stand again due to newly grown hair. There is a need for a styling tool that allows easy styling at home when drying hair without going to a beauty salon.

[0044] In order to prevent side hair from protruding, a

conventional device may be worn on the head in the form of a band. However, rear hair may be pressed by a band portion connecting both ends. Alternatively, a band-shaped device needs to be used for a long time for down perm styling, or there is a risk of burns when heat is applied.

[0045] The present disclosure provides the hair styling nozzle 200 that may be coupled to the air outlet 103 of the hair dryer 100 so that down perm styling may be performed at home.

[0046] The hair dryer 100 of the present disclosure may include a rear coupling portion 210 located at a rear side and fastened to the air outlet 103, a nozzle head 220 located at a front side and having nozzle holes 222, 223, and 224 (see FIG. 7) through which hot air is provided, and an air guide 230 connecting between the rear coupling portion 210 and the nozzle head 220 and guiding hot air to be supplied from the rear side to the front side.

[0047] As illustrated in FIG. 5, the rear coupling portion 210 having a shape corresponding to the air outlet 103 of the hair dryer 100 may be included, and the rear coupling portion 210 may include a ring coupling portion 211 fastened to an outer circumference of the air outlet 103 and a central coupling portion 215 fastened to a center of the air outlet 103.

[0048] The central coupling portion 215 may be fastened, through magnetic force, to a nozzle coupling portion 113 located at the center of the air outlet 103. A magnet having a polarity different from that of the nozzle coupling portion 113 may be disposed to fix the hair styling nozzle 200 to the main body head portion 101.

[0049] When the central coupling portion 215 and the nozzle coupling portion 113 are fixed by magnetic force, the ring coupling portion 211 comes into close contact with the outer circumference of the air outlet 103. A rear surface of the ring coupling portion 211 may include an elastic material so that the rear surface of the ring coupling portion 211 comes into close contact with the air outlet 103 of the head portion 101 to prevent air from leaking between the ring coupling portion 211 and the air outlet 103.

[0050] The nozzle head 220 located in front of the rear coupling portion 210 may include a plurality of first nozzle holes 222 for evenly supplying hot air introduced through the rear coupling portion 210 to hair.

[0051] The hair styling nozzle 200 of the present disclosure is a device used in close contact with a head above an ear, and an area of the nozzle head 220 is greater than an area of the rear coupling portion 210 so that hot air may be supplied to a wide area.

[0052] The nozzle head 220 may have a length in the horizontal direction greater than a length in the vertical direction and may have a rectangular shape or a shape in which corner portions are curved as illustrated in FIG. 4.

[0053] FIG. 6 is a horizontal cross-sectional view of the hair styling nozzle 200 according to the first embodiment of the present disclosure and is a cross-sectional view taken along line B-B of FIG. 4. As illustrated in FIG. 6, the nozzle head 220 may be curved to have a predetermined curvature in the horizontal direction corresponding to a shape of the head, such that both end portions protrude in a frontward direction. Since a length in the vertical direction is shorter than a length in the horizontal direction, and the portion of the head above the ear is not a portion having large curvature, the nozzle head 220 may have a flat surface in the vertical direction.

[0054] The air guide 230 may include an outer guide 231 extending from an outer circumference of the ring coupling portion 211 and a phase plug 235 extending from the central coupling portion 215.

[0055] Since the nozzle head 220 is wider in the horizontal direction than the rear coupling portion 210, the outer guide 231 extending from the rear coupling portion 210 to the nozzle head 220 has a front end wider than a rear end. The outer guide 231 may have a shape that gradually widens from the rear coupling portion 210 to the nozzle head 220, but may also be configured to have a shape that narrows from the rear end toward the front end and then widens again, as illustrated in FIG. 6.

[0056] Since the air outlet 103 has a ring shape, if the outer guide 231 does not have a portion (rear end portion) that collects air toward the center, hot air may not be smoothly supplied to a central portion. Accordingly, the rear end of the outer guide 231 may have a shape that narrows toward the front.

[0057] The phase plug 235 may form a gentle curved surface that narrows from the rear side toward the front side to correspond to a shape of the rear end of the outer guide 231. Although the phase plug 235 of the present embodiment is formed in a hemispherical shape, since a width in the horizontal direction of the nozzle head 220 is different from a width in the vertical direction of the nozzle head 220, a shape in the vertical direction and a shape in the horizontal direction of the phase plug 235 may be configured differently.

[0058] For down perm styling that presses hair above the ear downward, the nozzle head 220 may include a plurality of vertical ribs 221 extending in the vertical direction so that air discharged from the nozzle holes 222 flows downward. As illustrated in FIG. 6, the vertical ribs 221 may protrude in a frontward direction from the front surface thereof 226 of the nozzle head 220, and a plurality of vertical ribs 221 may be arranged at predetermined spacings in the horizontal direction.

[0059] FIG. 7 is a vertical cross-sectional view of the hair styling nozzle 200 according to the first embodiment of the present disclosure and is a cross-sectional view taken along line C-C of FIG. 4. The vertical ribs 221 protrude in a frontward direction from the front surface 226 of the nozzle head 220, so that the front surface 226 of the nozzle head 220 does not directly contact a scalp and may maintain a predetermined dis-

tance. Hot air provided through the first nozzle holes 222 to a space between the front surface 226 of the nozzle head 220 and the scalp may flow downward because horizontal flow is restricted by the vertical ribs 221.

[0060] The front surface 226 of the nozzle head 220 of the present disclosure is characterized by having multiple steps. Referring to FIG. 7, front surfaces 2261, 2262, and 2263 are formed in three steps, but may be formed as two front surfaces 226 or a greater number of front surfaces 226.

[0061] The front surface 226 may include a first front surface 2261 located at an uppermost portion and a second front surface 2262 located under the first front surface 2261 and located in a rearward direction. A third front surface 2263 may be located under the second front surface 2262, or the front surface 226 may be formed of a greater number of front surfaces 226 forming multiple steps.

[0062] Due to the multi-step structure, a spacing between the scalp of the user and the front surfaces 2261, 2262, and 2263 of the nozzle head is greater at a lower portion, and thus heat discharged from the first nozzle holes 222 may flow downward.

[0063] Referring to FIG. 7, front ends of the vertical ribs 221 form straight lines extending in the vertical direction, but rear ends of the vertical ribs 221 form steps and may be located in a rearward direction. That is, since the front surfaces 2261, 2262, and 2263 of the nozzle head 220 are located in a rearward direction as they extend downward, a width in the front-rear direction of the vertical ribs 221 may have a multi-step shape in which a lower side is wider than an upper side.

[0064] A plurality of first nozzle holes 222 facing in a frontward direction may be formed in the first front surface 2261. Air discharged from the first nozzle holes 222 toward the head in a direction perpendicular to the first front surface 2261 may flow downward along the vertical ribs 221.

[0065] In order to provide hot air flowing downward, the second nozzle hole 223 facing downward may be formed in a stepped portion between the first front surface 2261 and the second front surface 2262 disposed in rear of the first front surface 2261. When the third front surface 2263 is additionally included under the second front surface 2262, a third nozzle hole 224 may be further provided in a step between the second front surface 2262 and the third front surface 2263. Since the second nozzle hole 223 and the third nozzle hole 224 have similar roles, the second nozzle hole 223 will be described as a reference.

[0066] FIGS. 8 and 9 are views illustrating flows of air according to a size of the second nozzle hole 223 of the hair styling nozzle 200 of the present disclosure.

[0067] The lower end of the first front surface 2261 and the upper end of the second front surface 2262 are spaced apart from each other to form a step, and the second nozzle hole 223 may be formed in the step. A shape of the second nozzle hole 223 may vary according to positions of the lower end of the first front surface 2261 and the upper end of the second front surface 2262.

[0068] The embodiment illustrated in FIG. 8 is an embodiment in which the lower end of the first front surface 2261 and the upper end of the second front surface 2262 are located at the same height in the vertical direction ($y1=0$) and are arranged to be spaced apart from each other only in the front-rear direction ($x>0$).

[0069] In this regard, since the second nozzle hole 223 faces downward in the vertical direction, a direction of air discharged from the second nozzle hole 223 also faces downward. However, in this case, before hot air is provided to hair, the hot air may flow downward and be discharged, and thus a shape of the second nozzle hole 223 may be changed so that the hot air is provided further in a frontward direction.

[0070] The embodiment illustrated in FIG. 9 is an embodiment in which the lower end of the first front surface 2261 and the upper end of the second front surface 2262 are located to be spaced apart from each other in the vertical direction ($y2>0$), and the nozzle hole may have a shape opened in an oblique direction toward a lower side of the front surface 226. The flow of air in FIG. 9 illustrates a result of a simulation designed with $y2=2$ mm.

[0071] Air discharged from the second nozzle hole 223 of the present embodiment is discharged more obliquely than in the embodiment of FIG. 8, and thus hot air may reach a position farther in a frontward direction beyond front ends of the vertical ribs 221, as illustrated in FIG. 9. Accordingly, in the present embodiment, hot air may be more effectively transferred to hair located in front of the nozzle head 220.

[0072] The size in the front-rear direction of the second nozzle hole 223 may be formed greater than the size in the vertical direction ($x>y2$) so that hot air discharged through the second nozzle hole 223 is discharged in a direction inclined downward rather than in a frontward direction. Since the size in the front-rear direction and the size in the vertical direction of the second nozzle hole are determined by the positions of the lower end of the first front surface 2261 and the upper end of the second front surface 2262, a spacing between the lower end of the first front surface 2261 and the upper end of the second front surface 2262 may be configured such that the vertical direction is smaller than the front-rear direction.

[0073] The size in the front-rear direction of the second nozzle hole 223 may be formed greater than the size in the vertical direction ($x>y2$) so that hot air discharged through the second nozzle hole 223 is discharged in a direction inclined downward rather than in a frontward direction. Since the size in the front-rear direction and the size in the vertical direction of the

second nozzle hole are determined by the positions of the lower end of the first front surface 2261 and the upper end of the second front surface 2262, a spacing between the lower end of the first front surface 2261 and the upper end of the second front surface 2262 may be configured such that the vertical direction is smaller than the front-rear direction.

[0074] FIG. 10 is a view illustrating a use aspect of the hair styling nozzle 200 of the present disclosure. Since the hair styling nozzle 200 of the present disclosure is used in close contact with a portion above the ear, hot air flowing downward along the vertical ribs 221 may be supplied to the ear E as illustrated in FIG. 10.

[0075] The ear is a body organ that is particularly sensitive to temperature, and when hot air is directly supplied to the ear E, there is a problem that usability is degraded. In order to prevent heat from being directly supplied to the ear E, a lower end guide 241 located under the vertical ribs 221 may be further included.

[0076] FIG. 11 is a front perspective view of the hair styling nozzle 200 according to the second embodiment of the present disclosure and illustrates the lower end guide 241 located under the nozzle head 220 in the present embodiment. FIG. 12 is a vertical cross-sectional view of the hair styling nozzle 200 according to the second embodiment of the present disclosure and illustrates a flow of air in the hair styling nozzle 200.

[0077] As illustrated in FIG. 12, the lower end guide 241 may have a horizontal length corresponding to a horizontal width of the nozzle head 220 and may extend further in the rearward direction than rear ends of the vertical ribs 221. Hot air flowing downward along the vertical ribs 221 may be guided rearward by the lower end guide 241.

[0078] However, the lower end guide 241 of the present embodiment is located spaced apart by a predetermined distance from lower ends of the vertical ribs 221, and air may be supplied not only rearward of the hair styling nozzle 200 but also in a frontward direction thereof. Accordingly, hot air may gather above the ear, and a temperature above the ear may increase.

[0079] In order to solve the above problem, an inclination of the lower end guide 241 may be differently configured. FIG. 13 is a view illustrating a flow of air in the hair styling nozzle 200 according to the third embodiment of the present disclosure, and the lower end guide 241 of the present embodiment has a shape more inclined in a rearward direction than the above-described embodiment.

[0080] A lower flow path 243 formed by the lower end guide 241 is wider in the rearward direction, and thus air may be guided in a rearward direction rather than in a frontward direction. The lower end guide 241 may be constructed to have an inclination of 5 degrees or more and 30 degrees or less.

[0081] In addition, the vertical ribs 221 may extend to the lower end guide 241, so that air flowing downward along the vertical ribs 221 may, when reaching the lower end guide 241, flow rearward along an inclined direction of the lower end guide 241.

[0082] FIG. 14 is a view illustrating a flow of air in the hair styling nozzle 200 according to the first embodiment of the present disclosure. The vertical ribs 221 are located above the lower end guide 241 and may further include lower grooves 242 recessed from the rear side toward the front side.

[0083] When the lower grooves 242 are included, a space in which air flowing downward along the vertical ribs 221 may flow to the rear end is increased, and an amount of air flowing rearward of the nozzle head 220 along the lower flow path 243 may increase.

[0084] FIG. 15 is a view illustrating a flow of air in the hair styling nozzle 200 according to the fourth embodiment of the present disclosure. The present embodiment may include a wind blocking rib 244 protruding upward in front of the lower end guide 241 to block a flow of air flowing in a frontward direction.

[0085] The wind blocking rib 244 may block air flowing downward along the vertical ribs 221 from flowing in a frontward direction and increase an air volume of air flowing rearward along the lower end guide 241.

[0086] FIG. 16 is a view illustrating a state in which the hair styling nozzle 200 according to the first embodiment of the present disclosure is coupled to the main body head portion 101. As illustrated in FIG. 16, the main body of the hair dryer 100 has a cylindrical shape extending in the front-rear direction, and includes the head portion 101 in which the air outlet 103 is located and the handle portion 102 extending downward from the head portion 101 for a user to hold by hand.

[0087] When hot air of the hair styling nozzle 200 coupled to the front of the main body is supplied to a lower rear side of the hair styling nozzle 200 through the lower end guide 241, the hot air is supplied to the handle portion 102 of the main body, and thus a hand H holding the handle portion 102 may become hot. The hot air supplied to the handle portion 102 has a lower temperature than hot air directly supplied to a lower portion of the hair styling nozzle 200, but still affects usability.

[0088] In the present disclosure, a center guide 245 may be additionally provided on the lower end guide 241 so that hot air flowing rearward of the hair styling nozzle 200 through the lower end guide 241 may be supplied while avoiding the handle.

[0089] FIG. 17 is a cross-sectional view of the hair styling nozzle 200 according to the first embodiment of the present disclosure. The center guide 245 is located between the lower end guide 241 and a lower portion of the nozzle head 220 and starts from a lower rear surface of the vertical rib 221 located at a center and widens rearward. The center guide 245 may include a pair of inclined surfaces on the left and right and may have a left-right symmetrical shape.

[0090] The center guide 245 serves to disperse hot air flowing rearward along the lower end guide 241 in

the left-right direction and guide the hot air to flow while avoiding a hand of the user holding the handle portion.

[0091] Although FIG. 17 illustrates the center guide 245 including a straight inclination, the center guide 245 may include a curved surface convex in the rearward direction to guide a flow of air outward.

[0092] FIG. 18 is a view illustrating flows of air according to presence or absence of the center guide 245 of the hair styling nozzle 200 of the present disclosure. In (a), when the center guide 245 is not provided, air flows straight in the rearward direction and is transferred to the hand H of the user holding the handle portion 102.

[0093] However, when the center guide 245 is provided as in (b), air in a central portion flows along the center guide 245 in the left-right direction of the nozzle head, thereby reducing hot air transferred to the handle portion 102.

[0094] FIGS. 19 to 21 are views illustrating flows of air according to a size of the center guide 245 of the hair styling nozzle 200 of the present disclosure.

[0095] FIG. 19 illustrates flows of air in a cross-section taken along line E-E of FIG. 16. FIG. 19 illustrates flows of air in a case in which a rear-end width of the center guide 245 is 20 mm in (a), a case in which the rear-end width is 30.6 mm in (b), and a case in which the rear-end width is 40 mm in (c), where (a) is the narrowest case and (c) is the widest case. It may be confirmed that as the rear-end width increases, an amount of hot air supplied to the handle decreases.

[0096] FIG. 20 illustrates a flow of air in a cross-section taken along line F-F of FIG. 16, at a position spaced apart from the center by about 15 mm, and FIG. 21 illustrates a flow of air in a cross-section taken along line G-G at a position spaced apart from the center by about 25 mm.

[0097] Referring to FIG. 20, when a width of the center guide 245 is narrow (a), air is discharged at the F-F cross-sectional portion. However, when the width of the center guide is wide (c), air is guided further laterally than the F-F position by the center guide 245, and air discharged in the rearward direction is not detected.

[0098] Referring to FIG. 21, even in the embodiment of (b) in which the rear-end width of the center guide 245 is 30.6 mm, air discharged rearward of the lower flow path 243 is detected in the G-G cross-section. However, when the rear-end width of the center guide 245 is 40 mm or more, as illustrated in (c), air discharged rearward is not detected in the G-G cross-section.

[0099] As seen in FIGS. 19 to 21, as the width of the center guide 245 increases, an amount of air flowing toward the handle may decrease. However, as the rear-end width of the center guide 245 increases, a size of a flow path discharged rearward of the lower flow path 243 decreases, which may rather interfere with a flow of air flowing rearward, and thus the rear-end width may be determined within a range of 30 mm or more and 65 mm or less.

[0100] The present simulation is performed based on a case in which a size of the nozzle head 220 is about 100 mm, and a size of the center guide 245 may vary according to the size of the nozzle head 220.

[0101] When expressed as an angle, the center guide 245 may form inclined surfaces such that an angle between a pair of inclined surfaces is within a range of 120 degrees or more and 160 degrees or less.

[0102] Since the center guide 245 is located above the lower end guide 241, when the lower end guide 241 has an inclined surface inclined downward as in the above-described embodiment, a height of the lower end guide 241 may also increase toward the rear.

[0103] As described above, the hair styling nozzle 200 of the present disclosure may guide air to flow downward, thereby effectively implementing a style in which hair is in close contact with a scalp.

[0104] In addition, the hair styling nozzle 200 of the present disclosure may prevent hot air from being directly applied to an ear, thereby preventing burns caused by hot air.

[0105] In addition, in the hair styling nozzle 200 of the present disclosure, hot air is not transferred to a hand holding a handle, thereby improving usability.

[Mode]

[0106] With respect to various embodiments for implementing the present disclosure, duplicate descriptions as described above in the preceding section, Best Mode for Carrying Out the Disclosure are omitted.

[Industrial Applicability]

[0107] Since the present disclosure is applicable to hair dryers in various fields, industrial applicability is recognized.

Claims

1. A hair styling nozzle coupled to an air outlet of a hair dryer, the hair styling nozzle comprising:

    a rear coupling portion fastened to the air outlet;
    an air guide extending in a frontward direction from the rear coupling portion;
    a nozzle head located in front of the air guide and including a nozzle hole through which air is discharged;
    a lower end guide located spaced apart by a predetermined distance from a lower end of the nozzle head and guiding air discharged from the nozzle hole in a rearward direction; and
    a center guide disposed between the lower

end guide and the nozzle head and having a width increasing as the center guide extends in a rearward direction.

2. The hair styling nozzle of claim 1, wherein the center guide is located at a center in a horizontal direction of the nozzle head and has a left-right symmetrical shape.

3. The hair styling nozzle of claim 2, wherein the center guide includes a pair of inclined surfaces extending from a central portion respectively toward opposite sides in the horizontal direction as the center guide extends in a rearward direction, and
wherein an angle between the pair of inclined surfaces has a value of 120 degrees or greater and 160 degrees or smaller.

4. The hair styling nozzle of claim 2, wherein a horizontal width of a rear end of the center guide is 30 mm or greater and smaller than a width of the lower end guide.

5. The hair styling nozzle of claim 1, wherein the lower end guide extends rearwards so as to form an inclined surface inclined downward,
wherein the center guide has a vertical length increasing as the center guide extends toward a rear end thereof.

6. The hair styling nozzle of claim 1, wherein the nozzle head includes:

a nozzle hole through which air discharged from the air outlet is discharged to the outside; and
a plurality of vertical ribs protruding in a frontward direction from a front surface thereof, extending in a vertical direction, and guiding air discharged from the nozzle hole in a downward direction.

7. The hair styling nozzle of claim 6, wherein a front end of the center guide extends from a rear surface of a lower end of the vertical rib.

8. A hair dryer comprising:

a hair dryer main body including a ring-shaped air outlet; and
a hair styling nozzle coupled to the air outlet,
wherein the hair styling nozzle includes:

a rear coupling portion fastened to the air outlet;
an air guide extending in a frontward direction from the rear coupling portion;
a nozzle head located in front of the air guide and including a nozzle hole through which air is discharged;
a lower end guide located spaced apart by a predetermined distance from a lower end of the nozzle head and guiding air discharged from the nozzle hole in a rearward direction; and
a center guide disposed between the lower end guide and the nozzle head and having a width increasing as the center guide extends in a rearward direction.

Fig. 1

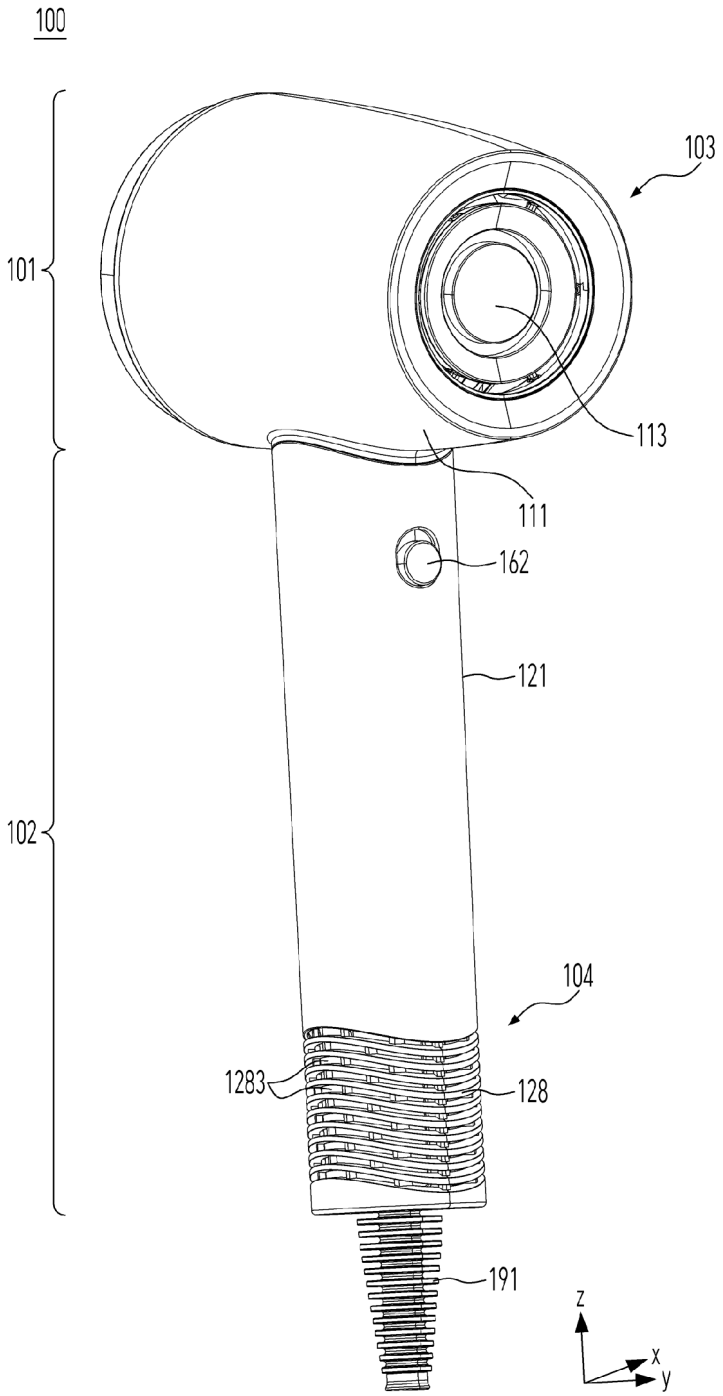

Fig. 2

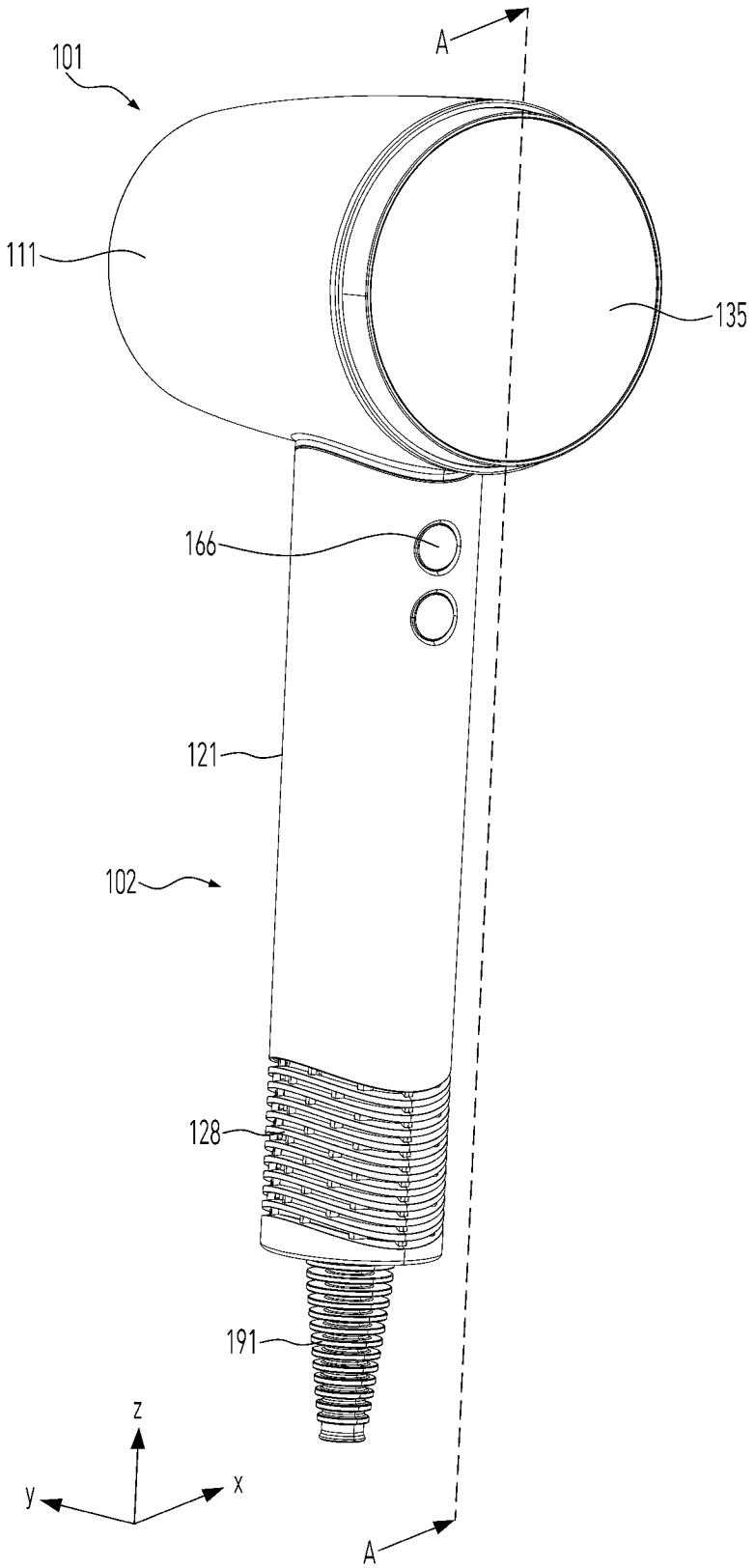

Fig. 3

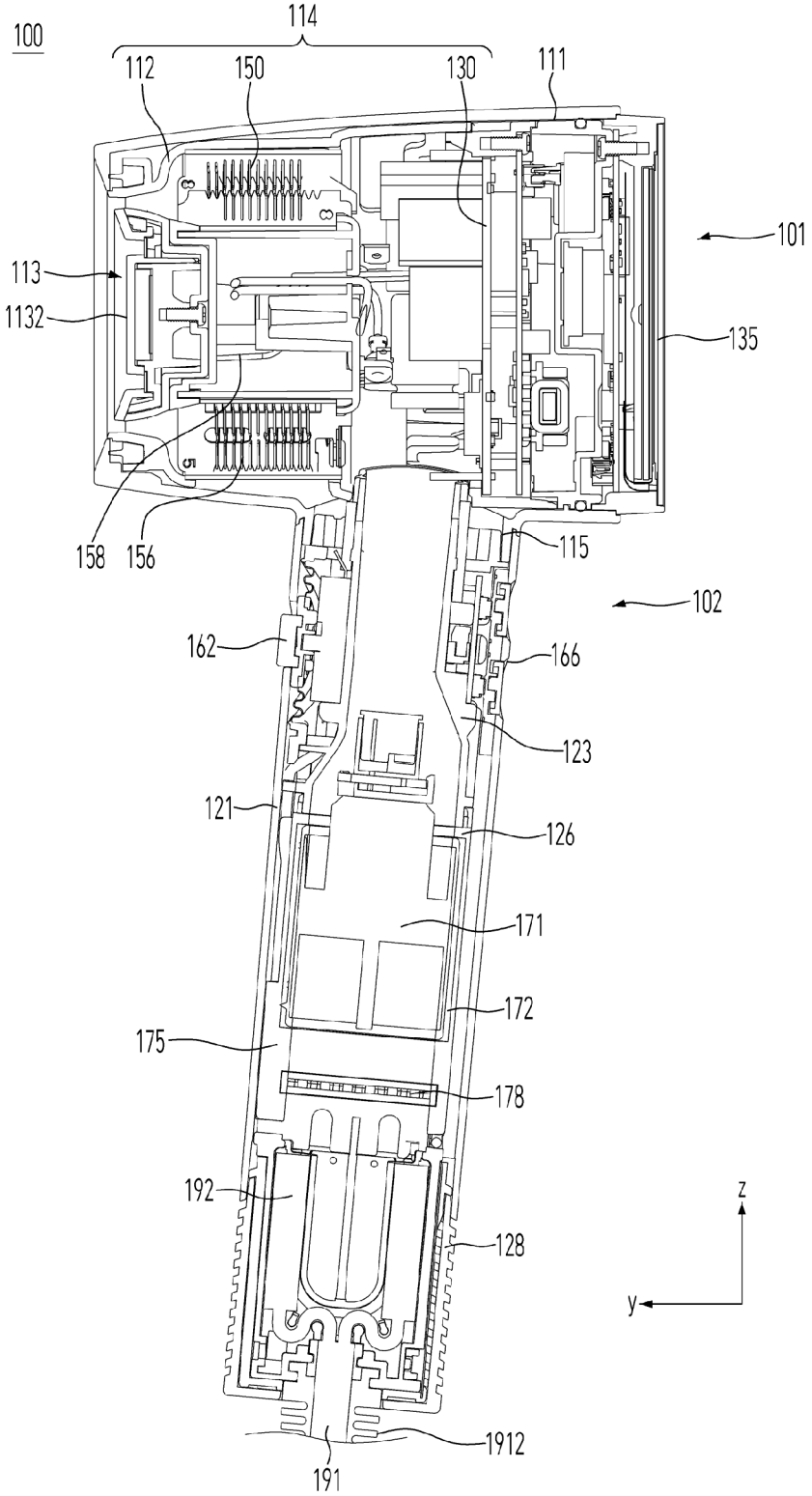
100
114
112
150
130
111
101
113
1132
135
158
156
115
102
162
166
123
121
126
171
172
175
178
192
128
z
y
1912
191

Fig. 4

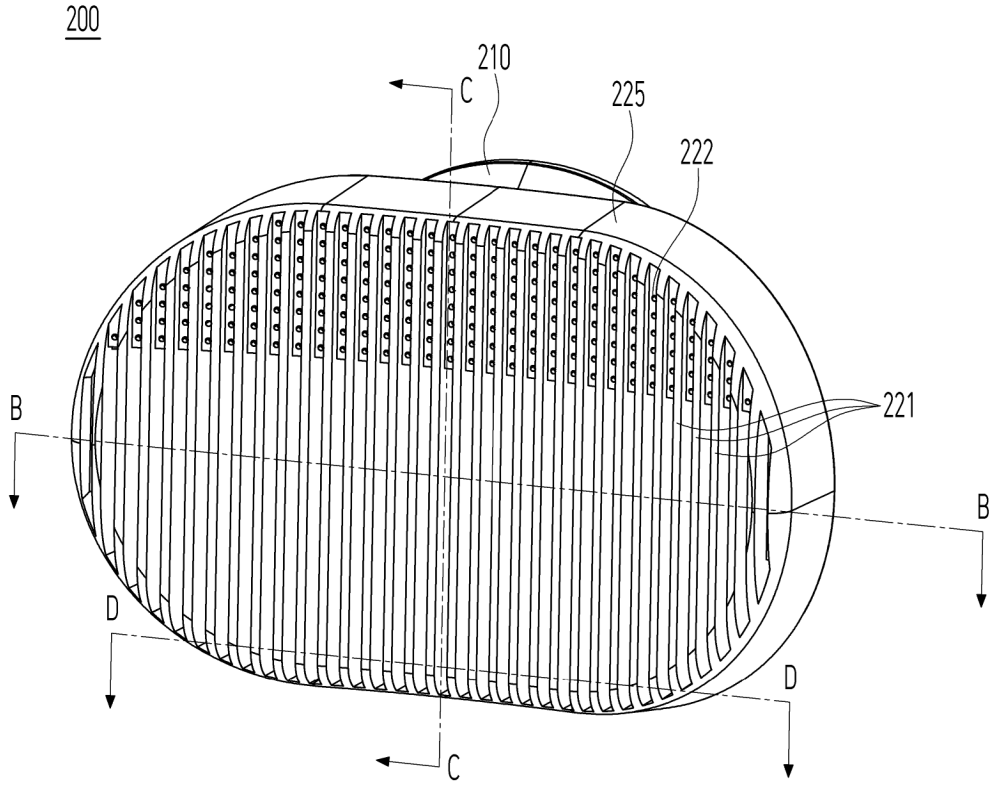

Fig. 5

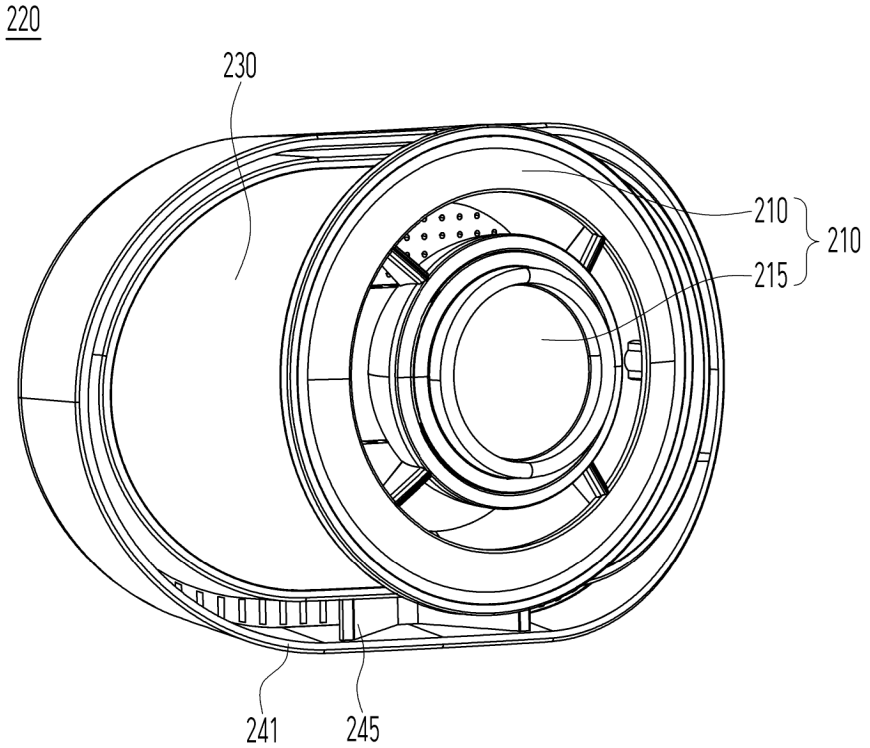

Fig. 6

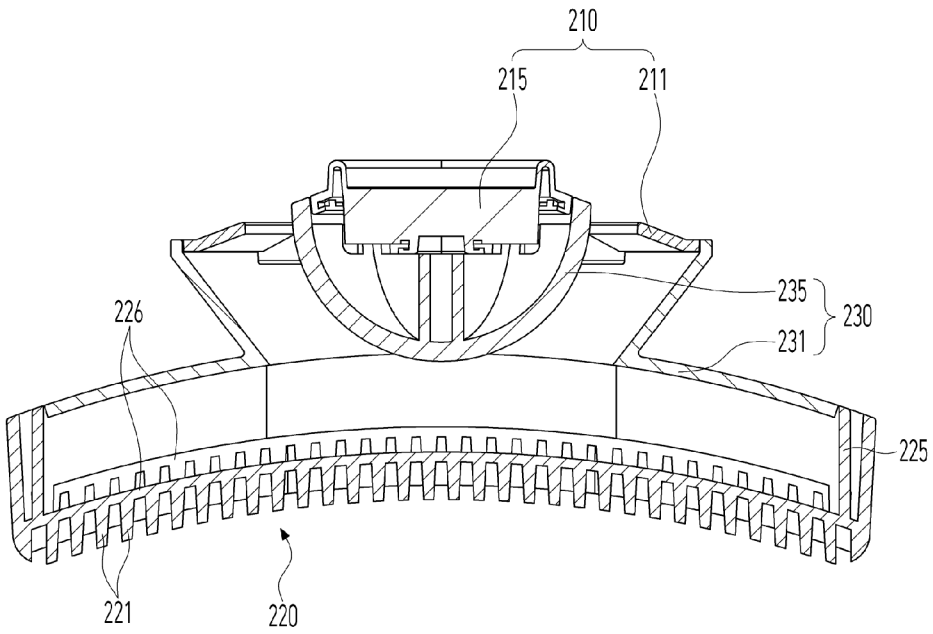
210
215
211
235
230
231
226
225
221
220

Fig. 7

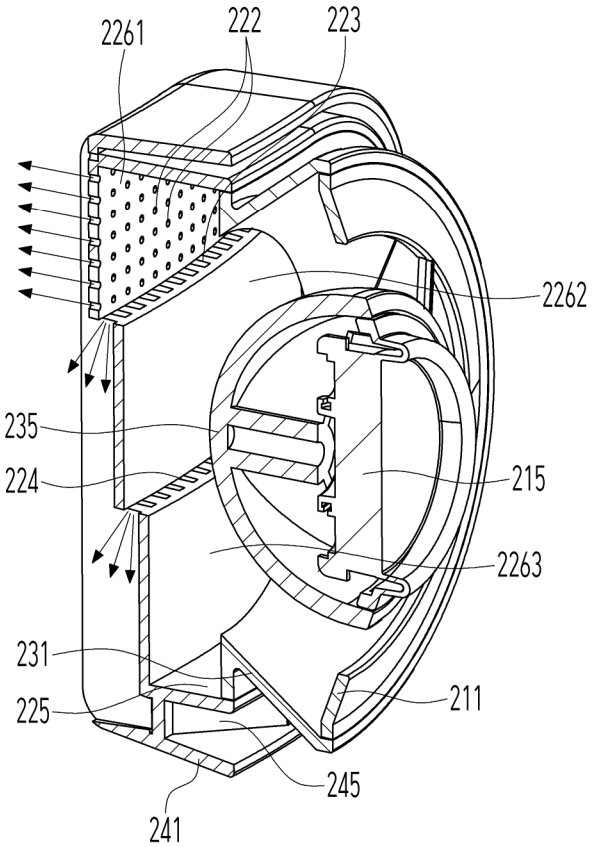
2261
222
223
2262
235
224
215
2263
231
225
211
245
241

Fig. 8

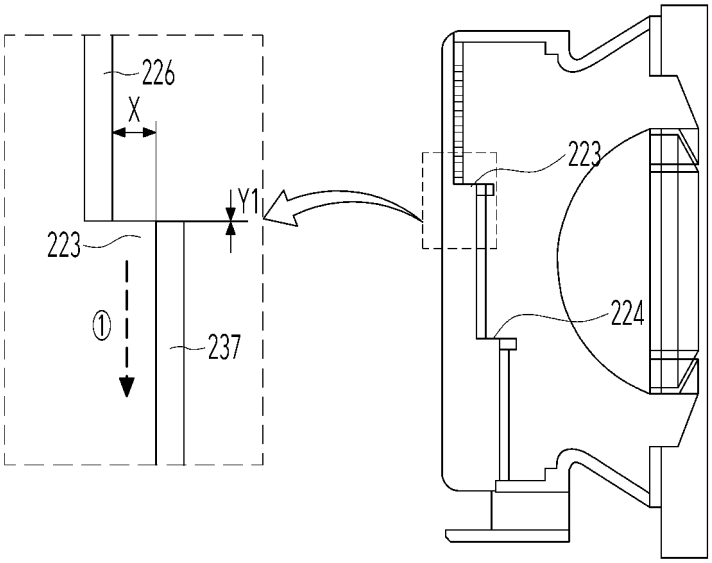

Fig. 9

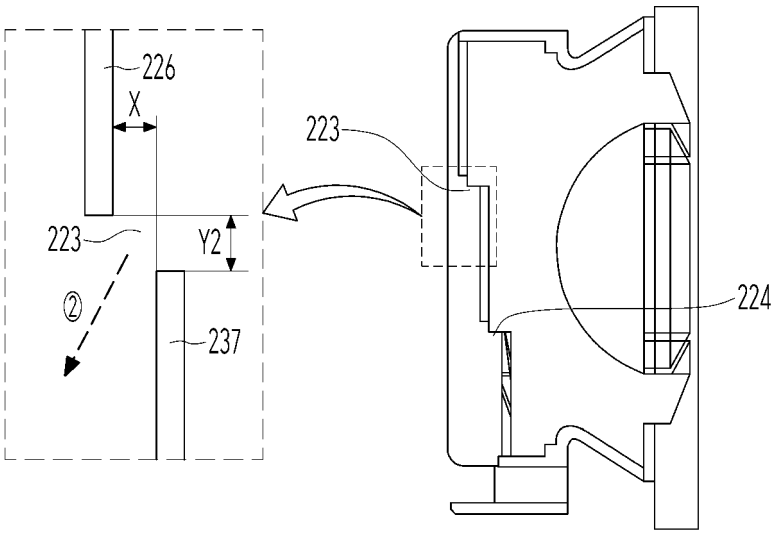

Fig. 10

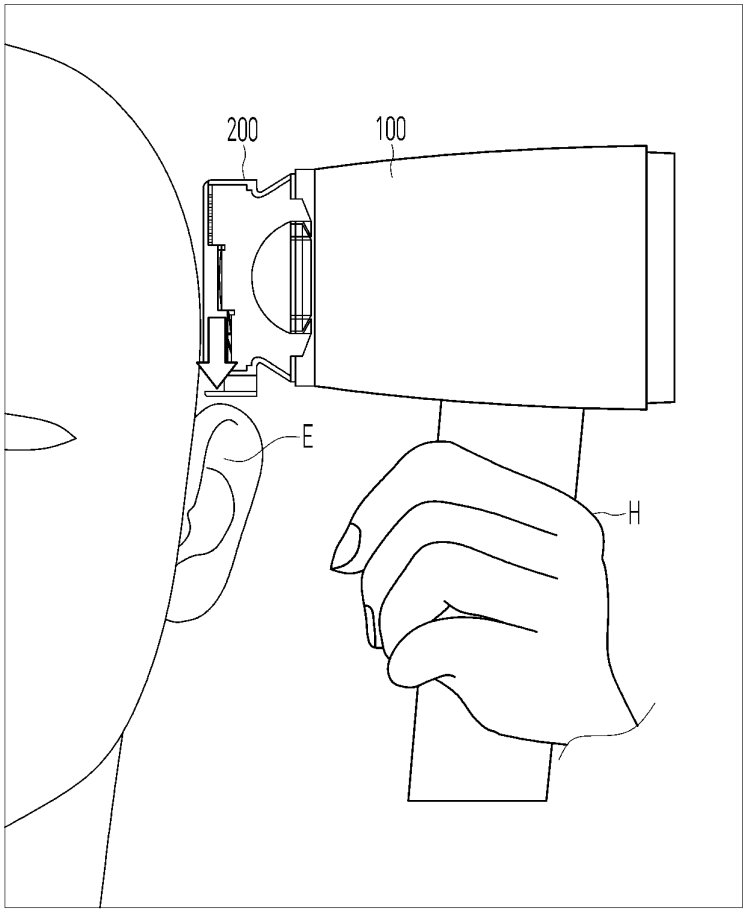

Fig. 11

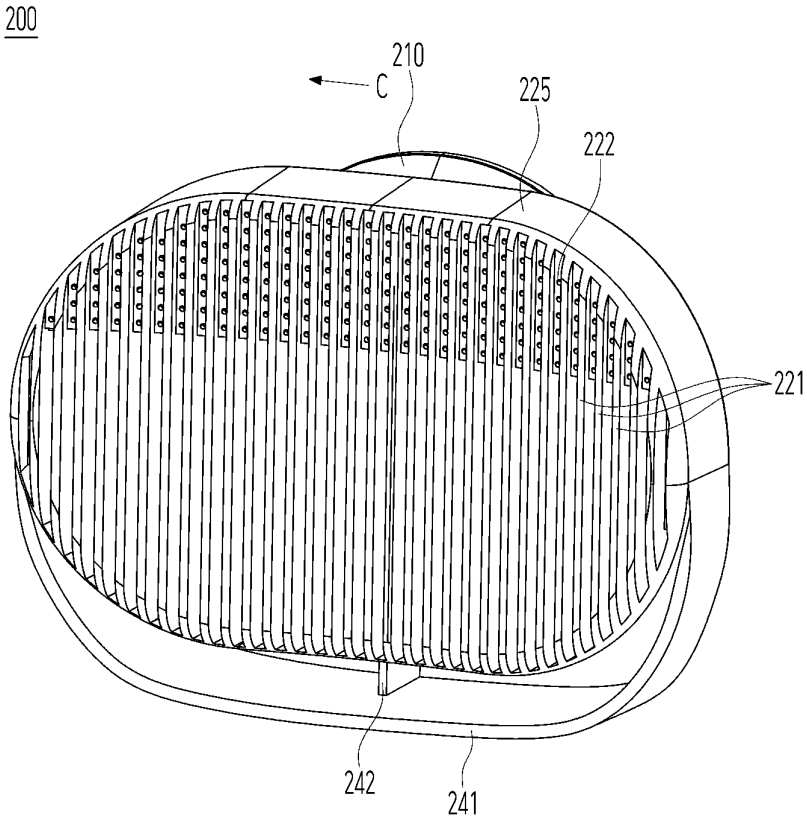

Fig. 12

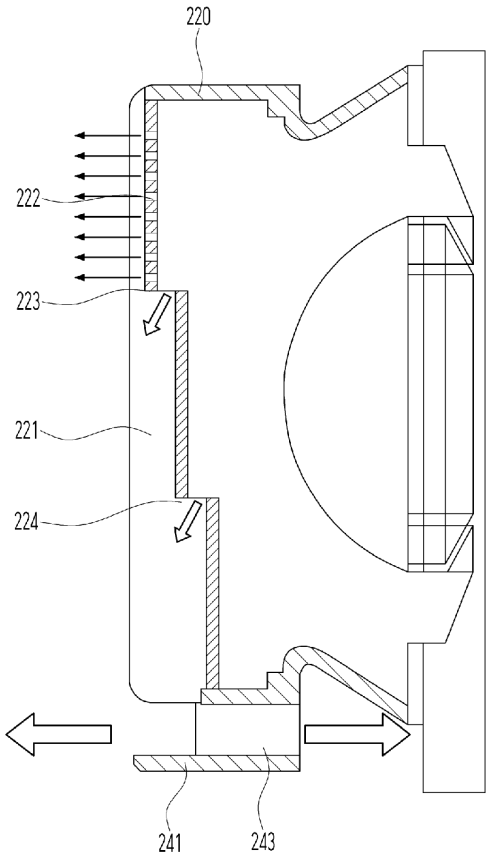

Fig. 13

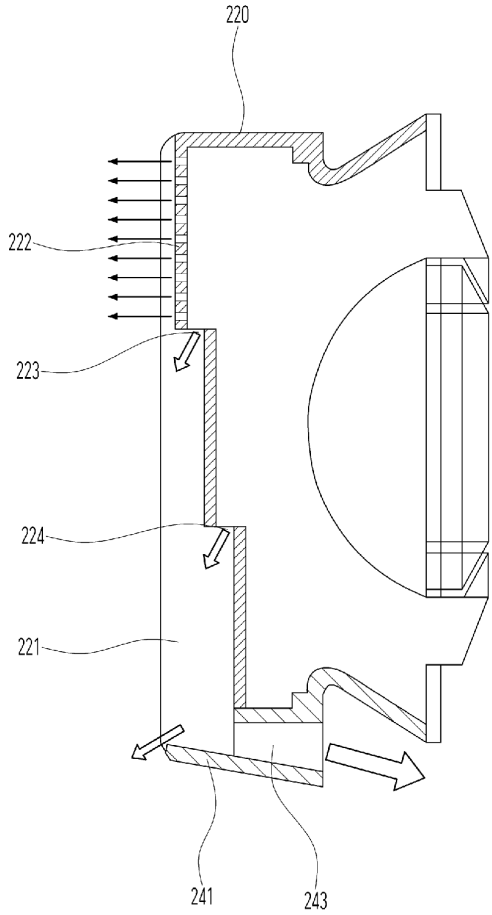

Fig. 14

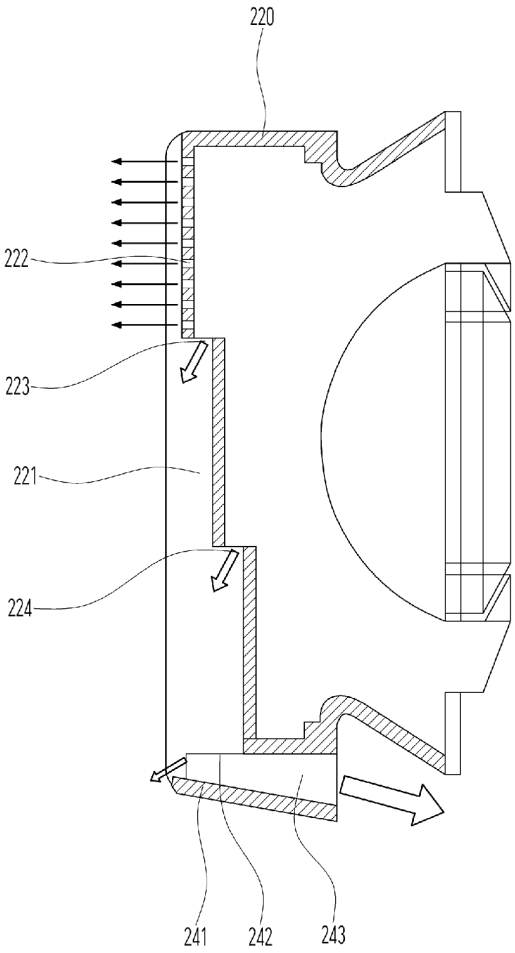

Fig. 15

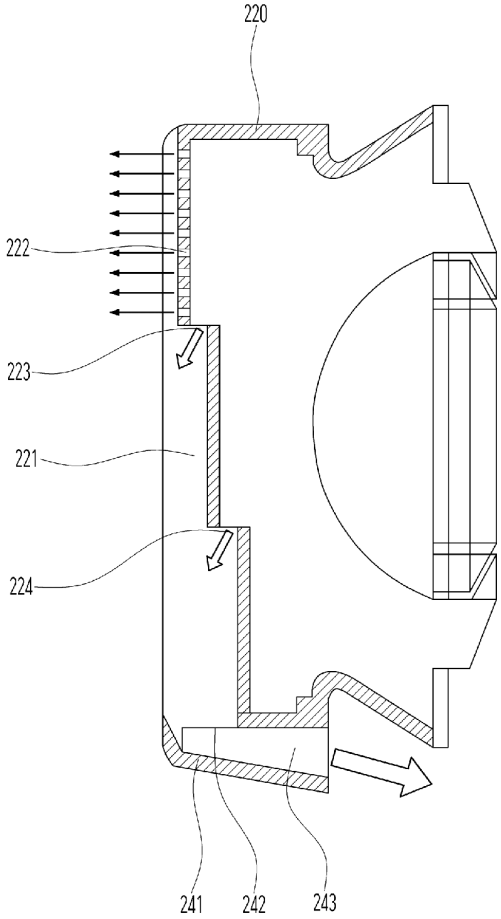

Fig. 16

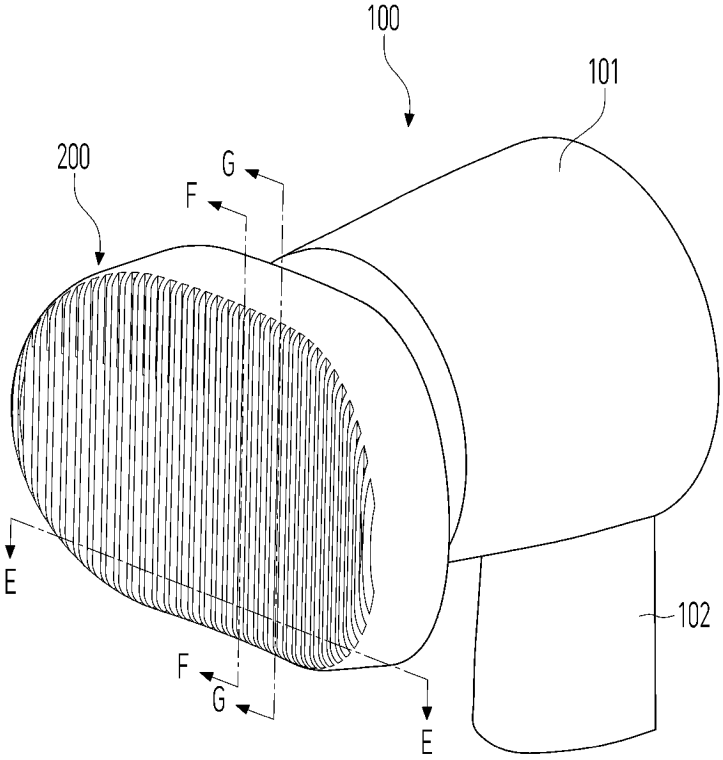

Fig. 17

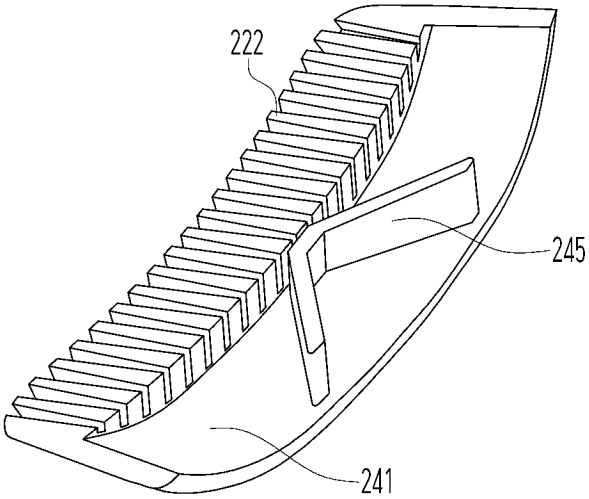

Fig. 18

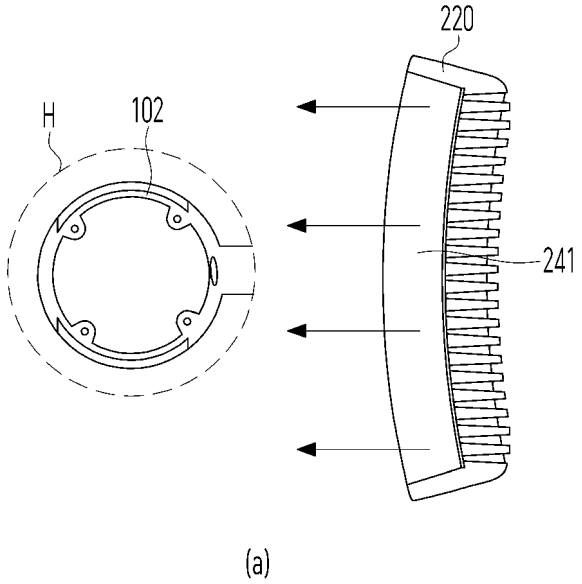

Fig. 19

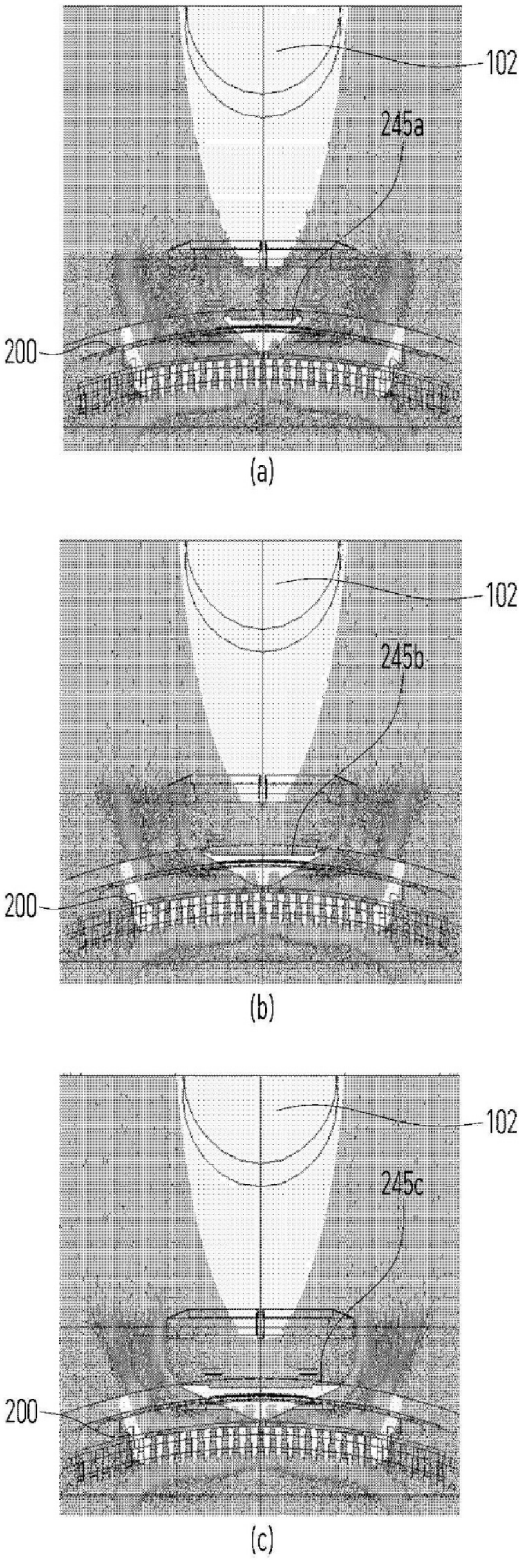

Fig. 20

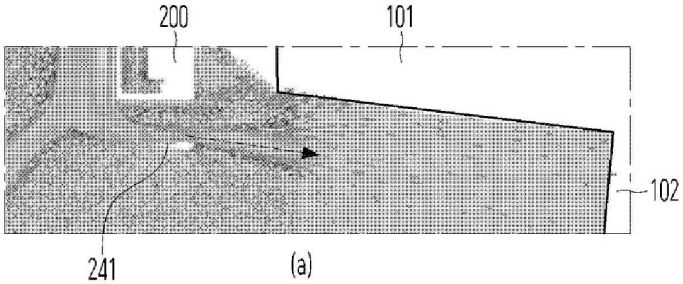

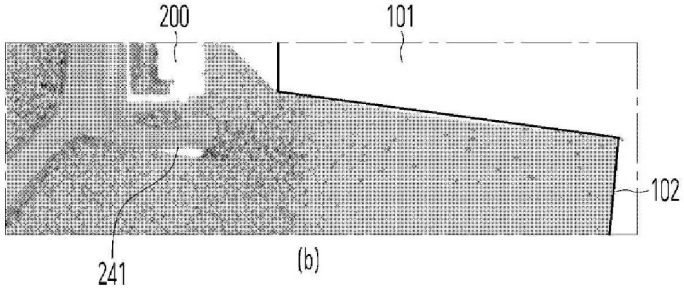

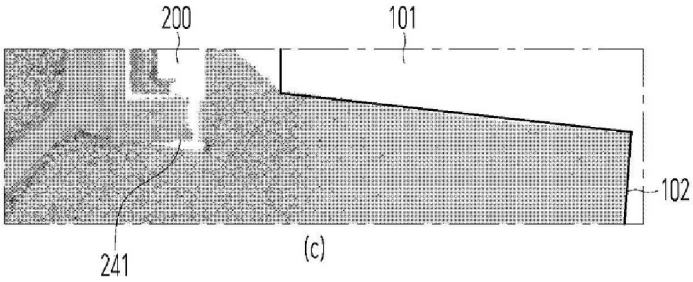

Fig. 21

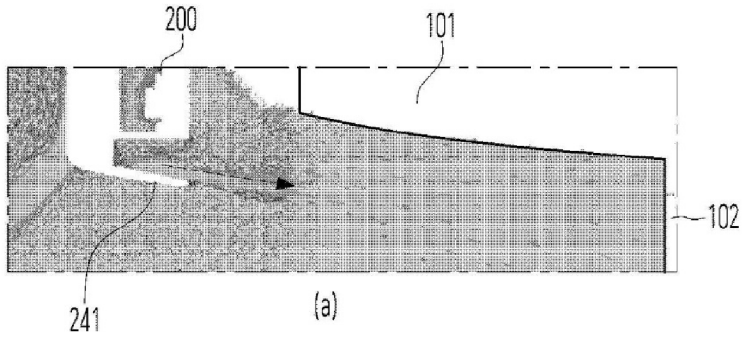

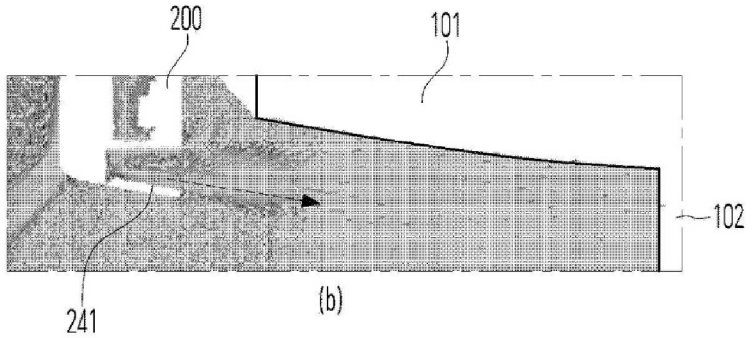

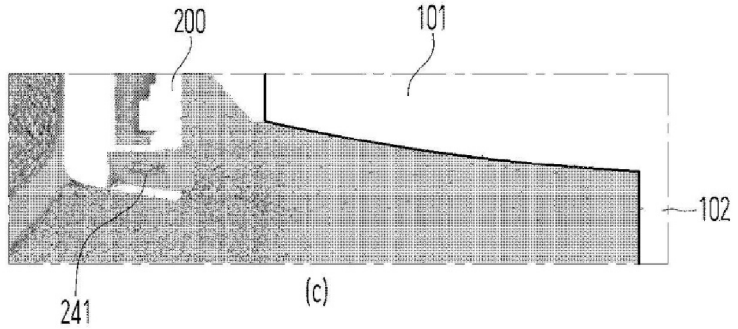

INTERNATIONAL SEARCH REPORT

International application No.
PCT/KR2025/002316

A. CLASSIFICATION OF SUBJECT MATTER

A45D 20/12(2006.01)i

According to International Patent Classification (IPC) or to both national classification and IPC

B. FIELDS SEARCHED

Minimum documentation searched (classification system followed by classification symbols)

A45D 20/12(2006.01); A45D 20/10(2006.01); A45D 20/52(2006.01); A45D 24/10(2006.01); A47K 10/48(2006.01)

Documentation searched other than minimum documentation to the extent that such documents are included in the fields searched

Korean utility models and applications for utility models: IPC as above
Japanese utility models and applications for utility models: IPC as above

Electronic data base consulted during the international search (name of data base and, where practicable, search terms used)

eKOMPASS (KIPO internal) & keywords: 헤어(hair), 드라이기(dryer), 바람(wind), 노즐(nozzle), 방향(direction)

C. DOCUMENTS CONSIDERED TO BE RELEVANT

Category*	Citation of document, with indication, where appropriate, of the relevant passages	Relevant to claim No.
A	KR 10-2019-0084801 A (LEE, Chang Hee) 17 July 2019 (2019-07-17) See claim 1; paragraphs [0019]-[0030]; and figures 1-4.	1-8
A	US 2013-0269205 A1 (HADA, J.) 17 October 2013 (2013-10-17) See claims 1-20; and figures 3-5.	1-8
A	KR 10-2008-0094123 A (DAEWOO ELECTRONICS CORPORATION) 23 October 2008 (2008-10-23) See claims 1-4; and figure 1.	1-8
A	KR 10-2014-0073926 A (HA, Sang Hwan) 17 June 2014 (2014-06-17) See claims 1-7; and figures 1-5.	1-8
A	KR 10-2016-0037053 A (SHIN, Ye Geon) 05 April 2016 (2016-04-05) See claims 1 and 2; and figures 3 and 4.	1-8

☐ Further documents are listed in the continuation of Box C. ☑ See patent family annex.

* Special categories of cited documents:
"A" document defining the general state of the art which is not considered to be of particular relevance
"D" document cited by the applicant in the international application
"E" earlier application or patent but published on or after the international filing date
"L" document which may throw doubts on priority claim(s) or which is cited to establish the publication date of another citation or other special reason (as specified)
"O" document referring to an oral disclosure, use, exhibition or other means
"P" document published prior to the international filing date but later than the priority date claimed

"T" later document published after the international filing date or priority date and not in conflict with the application but cited to understand the principle or theory underlying the invention
"X" document of particular relevance; the claimed invention cannot be considered novel or cannot be considered to involve an inventive step when the document is taken alone
"Y" document of particular relevance; the claimed invention cannot be considered to involve an inventive step when the document is combined with one or more other such documents, such combination being obvious to a person skilled in the art
"&" document member of the same patent family

Date of the actual completion of the international search	Date of mailing of the international search report
30 May 2025	**01 June 2025**
Name and mailing address of the ISA/KR **Korean Intellectual Property Office** **Government Complex-Daejeon Building 4, 189 Cheongsa-ro, Seo-gu, Daejeon 35208** Facsimile No. **+82-42-481-8578**	Authorized officer Telephone No.

Form PCT/ISA/210 (second sheet) (July 2022)

INTERNATIONAL SEARCH REPORT
Information on patent family members

International application No.
PCT/KR2025/002316

Patent document cited in search report	Publication date (day/month/year)	Patent family member(s)	Publication date (day/month/year)
KR 10-2019-0084801 A	17 July 2019	None	
US 2013-0269205 A1	17 October 2013	US 2015-0122282 A1	07 May 2015
		US 8959788 B2	24 February 2015
		US 9439493 B2	13 September 2016
		WO 2013-158626 A1	24 October 2013
KR 10-2008-0094123 A	23 October 2008	None	
KR 10-2014-0073926 A	17 June 2014	WO 2014-088157 A1	12 June 2014
KR 10-2016-0037053 A	05 April 2016	KR 10-1670508 B1	31 October 2016
		KR 10-1670509 B1	31 October 2016
		KR 10-2016-0037052 A	05 April 2016
		KR 10-2016-0037054 A	05 April 2016

Form PCT/ISA/210 (patent family annex) (July 2022)