(19) Europäisches Patentamt
European Patent Office
Office européen des brevets

(11) EP 4 825 271 A1

(12) EUROPEAN PATENT APPLICATION

(43) Date of publication:
21.10.2026 Bulletin 2026/43

(21) Application number: **26169562.1**

(22) Date of filing: **31.03.2026**

(51) International Patent Classification (IPC):
A47D 13/02 *(2006.01)*

(52) Cooperative Patent Classification (CPC):
A47D 13/025; A47D 13/02

(84) Designated Contracting States:
AL AT BE BG CH CY CZ DE DK EE ES FI FR GB GR HR HU IE IS IT LI LT LU LV MC ME MK MT NL NO PL PT RO RS SE SI SK SM TR
Designated Extension States:
BA
Designated Validation States:
GE KH LA MA MD TN

(30) Priority: **18.04.2025 IT 202500008868**

(71) Applicant: **HUSTLE S.r.l**
61122 Pesaro (PU) (IT)

(72) Inventor: **NINNI, Sara**
PESARO (IT)

(74) Representative: **Lunati & Mazzoni S.r.L.**
Via Carlo Pisacane, 36
20129 Milano (IT)

(54) BABY CARRIER

(57) A baby carrier (1) is provided comprising a main support portion (2) designed to support an infant, developing along a main trajectory (2a); a belt (3) integral to the main portion (2), developing transversely to the main trajectory (2a) and configured to be belted around the torso of a preferably adult user when the baby carrier (1) is in use; one or more shoulder straps (4) integral to the main portion (2) and connected to the main portion (2) at positions of main portion (2) reciprocally mirroring each other with respect to the main trajectory (2a) and at one side of the main portion (2) opposite the belt (3) in such a way that it can rest stably on both shoulders of the adult when the baby carrier (1) is in use; a pair of flaps (5) integral to the main portion (2) and connected, mutually mirroring the main trajectory (2a), to the main portion (2) each at a respective side of main portion (2) included between belt (3) and one or more shoulder straps (4) developing transversely to the main trajectory (2a) so as to be able to envelop the infant below the axillary area of the infant; and a pair of bands (7) integral to the main portion (2) and connected, reciprocally mirroring the main trajectory (2a), each to a respective flap (5) and to one between the main portion (2) and the belt (3) so as to make a slot (70) within which a lower limb may be inserted, when the baby carrier (1) is in use.

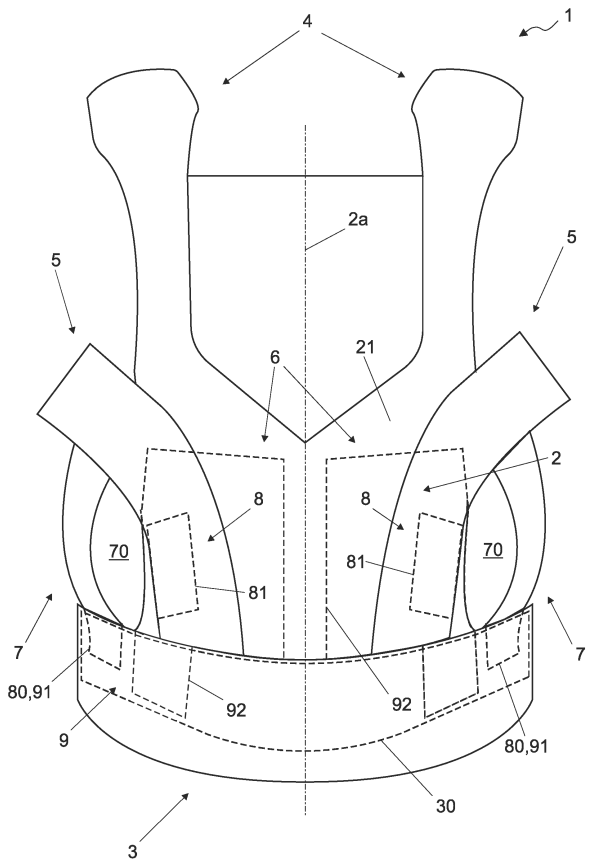

Fig. 1

EP 4 825 271 A1

Description

[0001] The present invention relates to a baby carrier of the type specified in the preamble of the first claim.

[0002] In particular, the present invention relates to a device, also known by the French term *porte-enfant,* which allows for the stable support of a child attached to the body of an adult.

[0003] As is known, in broad terms, the baby carrier is a device that comprises a main support portion connected to two shoulder straps and a belt. It also comprises outer strips, connected to the main portion and to the belt, adjustable in connection to the belt in order to be able to modify the support area for the infant.

[0004] In some baby carriers of the prior art, the size of the outer strips is also adjustable, for example by means of a zip approximately parallel to the belt 4 which allows the size of each outer strip to be expanded transversely to the belt.

[0005] The ability to vary the size and positioning of the outer strips with respect to the belt is an important feature that commonly allows the baby carrier to be adapted to the infant's physical shape while ensuring an excellent level of support and, therefore, comfort and safety.

[0006] The prior art described involves some significant drawbacks.

[0007] In particular, despite the various adjustment possibilities, the infant may assume uncomfortable and not entirely safe positions.

[0008] In particular, especially if the infant is small in build, known devices do not allow them to be held firmly in the lower support area.

[0009] Furthermore, not all adjustments are suitable for all the different positions that the infant may assume, for example facing the adult or facing the outside environment. In this situation, the technical task underpinning the present invention is to design a baby carrier capable of substantially obviating at least some of the aforementioned drawbacks.

[0010] Within the scope of this technical task, an important aim of the invention is to obtain a baby carrier that is able to support an infant in a stable and effective manner. Therefore, another important aim of the invention is to provide a baby carrier that is comfortable and safe, in particular by avoiding unwanted movements of the infant, especially, but not only, if the latter is of small build.

[0011] In conclusion, a further aim of the invention is to obtain a baby carrier that allows an infant to be efficiently supported in any positioning mode, in particular both facing the adult and the outside environment.

[0012] The technical task and specified purposes are achieved by a baby carrier as claimed in the appended claim 1.

[0013] Preferred technical solutions are highlighted in the dependent claims.

[0014] The characteristics and advantages of the invention are further clarified by the detailed description of preferred embodiments of the invention, with reference to the accompanying drawings, wherein:

Fig. 1 shows a schematic front view of a baby carrier according to the invention, in which the bands are in a first configuration constrained to the belt forming a more extended slot;

Fig. 2 shows a schematic front view of a baby carrier according to the invention, in which the bands are in a second configuration constrained to the main portion forming a less extended slot;

Fig. 3 is a side view of a baby carrier according to the invention in which the bands are in the second configuration and a baby is shown in dashed lines facing the outside environment and resting on the torso (not shown) of an adult on whom the baby carrier is being used;

Fig. 4a represents a front view of a baby carrier according to the invention, i.e. from the point of view of the outside environment when the baby carrier is in use;

Fig. 4b shows a rear view of a baby carrier according to the invention, i.e. from the point of view of the adult when the baby carrier is in use;

Fig. 5a shows a detailed view of the constraint means of a baby carrier according to the invention in which bands and outer strips are in a second extreme position so as to form a maximum lower extension support for the infant;

Fig. 5b is a detailed view of the constraint means of a baby carrier according to the invention in which bands and outer strips are in an intermediate position so as to form a maximum lower extension support for the infant; and

Fig. 5c represents a detailed view of the constraint means of a baby carrier according to the invention in which bands and outer strips are in a first extreme position so as to form a minimum lower extension support for the infant.

[0015] In this document, measurements, values, shapes, and geometric references (such as perpendicularity and parallelism), when associated with words like "approximately" or other similar terms such as "virtually" or "substantially," are to be understood as subject to measurement errors or inaccuracies due to production and/or manufacturing errors and, most importantly, subject to a slight deviation from the value, measurement, shape, or geometric reference to which they are associated. For example, such terms, when associated with a value, preferably indicate a deviation of no more than 10% from the value itself.

[0016] Moreover, when terms such as "first," "second," "upper," "lower," "primary," and "secondary" are used, they do not necessarily identify an order, priority of relation, or relative position but can simply be used to distinguish different components more clearly one from

the other.

[0017] Unless otherwise specified, as results from the following description, terms such as "processing", "computing", "determination", "computation", or similar are considered to refer to the action and/or processes of a computer or similar electronic computation device that manipulates and/or transforms data represented as physical quantities, such as electronic magnitudes of records of a computing system and/or memories into other data similarly represented as physical quantities within computer systems, records, or other storage, transmission, or information display devices.

[0018] The measurements and data reported in this text are to be considered, unless otherwise indicated, as being performed in the International Standard Atmosphere (ICAO) (ISO 2533:1975).

[0019] With reference to the Figures, the baby carrier according to the invention is indicated in its entirety by the number **1.**

[0020] The baby carrier 1, as the terms themselves suggest, is a device that allows the stable support of a baby attached to the body of an adult person.

[0021] In even more detail, it is designed to allow the infant to be supported while resting in contact with an adult's torso, as happens for example with common baby slings. Therefore, the baby carrier 1 comprises at least one main portion **2.**

[0022] The main portion 2 is a support portion, preferably membrane-based. Therefore, it is designed to support a load and/or retain a body. Conveniently, the main portion 2 is designed to support an infant.

[0023] Therefore, the main portion 2 develops at least along a main trajectory **2a.**

[0024] The main trajectory 2a is essentially virtual and represents exclusively a reference line through which the various components of the baby carrier 1 can be defined. In particular, the main trajectory 2a represents a median line of the main portion 2, i.e. a line that passes through a sagittal plane dividing the main portion 2 into two almost symmetrical parts.

[0025] In fact, the main portion 2 develops along the main trajectory 2a such that, when the baby carrier 1 is in use, an infant can be supported at their torso starting from the buttocks passing between the lower limbs.

[0026] Since the main portion 2 supports the infant and is preferably membrane-based, it is suitable for contact with it.

[0027] In detail, in this regard, the main portion 2 defines a first face **20.** The latter is designed to come into contact with the infant when the baby carrier 1 is in use. Therefore, the first face 20 is the part of the main portion 2 that faces the transported child and the adult.

[0028] In addition, the main portion 2 also comprises a second face **21.**

[0029] The second face 21 is substantially placed in the opposite position to the first face 20. Thus, the second face is placed so as to face outwards when the baby carrier 1 is in use.

[0030] The baby carrier 1 thus comprises means that allow it to be attached to the body of an adult while the main portion 2 supports the infant.

[0031] In detail, the baby carrier 1 comprises at least one belt 3 and one or more shoulder straps **4.**

[0032] The belt 3 is integral to the main portion 2. Furthermore, the belt 3 preferably develops transversely to the main trajectory 2a. Therefore, the belt 3 is configured to be belted around the torso of a user, preferably an adult, when the baby carrier 1 is in use.

[0033] This means that, appropriately, the belt 3 is connected to the main portion 2 in such a way that it is positioned below the main portion 2 itself when the baby carrier 1 is in use.

[0034] The belt 3 is a well-known object in itself which can be made in a multitude of ways and with different closing systems. In any case, belts of this type are well known to those skilled in the art and, for this reason, are not described in detail.

[0035] In general, the belt 3 comprises at least one internal side **30.** The internal side 30 is, obviously, the part of the belt 3 intended to face, and therefore come into contact with, the torso, for example with the pelvis, of the adult user.

[0036] The one or more shoulder straps 4 are also integral to the main portion 2. Obviously, as the terminology suggests, they are designed to rest on the user's shoulders. Furthermore, more generally, the one or more shoulder straps 4 are connected to the main portion 2 at positions of the main portion 2 reciprocally mirroring each other with respect to the main trajectory 2a.

[0037] Therefore, this means that the one or more shoulder straps 4 are connected at two different points of the main portion 2.

[0038] Among the various possible configurations, the shoulder straps 4 may be present in a number equal to one and may therefore comprise a single shoulder strap constrained, at the ends thereof, to the aforementioned mirroring positions of the main portion 2. Therefore, in this case, the shoulder strap 4 defines with the main portion 2 a hole through which the user's head can pass for putting on the baby carrier 1. In other words, this configuration is similar to that of a bib wherein the weight of the infant is discharged on the shoulders, but also on the neck of the user. In a further preferred embodiment, the shoulder straps 4 are at least two in number. Therefore, each constraint position of the main portion 2 corresponds to a distinct shoulder strap 4.

[0039] In this case, as better specified below, each shoulder strap 4 can be positioned on a respective shoulder creating a substantially backpack-like conformation.

[0040] In any case, preferably, the one or more shoulder straps 4 are connected to the main portion 2 at one side of the main portion 2 opposite the belt 3 in such a way that it can rest stably on both shoulders of

the adult when the baby carrier 1 is in use.

[0041] Therefore, the baby carrier 1 can be stably constrained to the adult's body by means of the belt 3 and shoulder straps 4 while the main portion 2 keeps the infant attached to the adult's body.

[0042] The baby carrier 1 also comprises further elements.

[0043] To increase safety, the baby carrier 1 preferably also comprises a pair of flaps **5.** The flaps 5 are integral to the main portion 2. They are further connected, mutually mirroring the main trajectory 2a, to the main portion 2.

[0044] Therefore, the flaps 5 are each connected at a respective side of the main portion 2 comprised between belt 3 and one or more shoulder straps 4.

[0045] Furthermore, preferably, the flaps 5 develop transversely to the main trajectory 2a so as to be able to envelop the infant below their axillary area.

[0046] The flaps 5 can be shaped according to different ways.

[0047] For example, the flaps 5 can be rigid at least in part, with respect to the membrane-based main portion 2. This means that each flap 5 can create a sort of containment edge for the infant.

[0048] Or, each flap 5 can be connected to a respective shoulder strap 4.

[0049] Thus, in this latter case, each flap 5 is preferably constrained to the belt 3. Furthermore, in even more detail, each flap 5 preferably develops at the second face 21 of the main portion 2 in such a way that it does not contact the infant when the baby carrier 1 is in use.

[0050] This configuration has, in addition, the advantage that the belt 3 and the main portion 2 are both directly mutually constrained and indirectly mutually constrained through each of the shoulder straps 4. Therefore, such a conformation makes the baby carrier 1 even more robust.

[0051] The baby carrier 1 also comprises a pair of bands **7.**

[0052] The bands 7 are two elements with an elongated shape which mainly develop along a trajectory. Similarly to the main portion 2, the bands 7 are low thickness elements, having an almost ribbon-like shape.

[0053] The bands 7 are therefore also integral to the main portion 2, at least when the baby carrier 1 is in use. Therefore, the bands 7 are connected, reciprocally mirroring the main trajectory 2a, each to a respective flap 5 and to one between the main portion 2 and the belt 3. Therefore, advantageously, the bands 7 each allow the creation of a slot **70.**

[0054] The slot 70 is nothing other than a through hole. In particular, a lower limb of the infant can be advantageously inserted into the slot 70 when the baby carrier 1 is in use. Therefore, the bands 7 allow for the creation of a conformation in which the infant's legs remain stably housed inside the respective slots 70 to increase the safety of the baby carrier 1.

[0055] Furthermore, preferably, each band 7 is removably constrained to one of the main portion 2 or the belt 3. The fact that it is removable advantageously allows at least a first configuration and a second configuration of the bands 7 to be defined.

[0056] In the first configuration, the band 7 is constrained to the belt 3. Thus, the slot 70 is bounded by at least part of the band 7, the flap 5, the main support 2 and the belt 3.

[0057] Therefore, in this configuration, the slot 70 defines a greater extension for the housing of the limb at least in comparison with the second configuration. In fact, as better described later, the bands 7 define a plurality of first configurations.

[0058] In the second configuration, instead, the band 7 is constrained to the main support 2. Thus, the slot 70 is bounded by at least part of the band 7, the flap 5 and the main support 2. In this case, therefore, the slot 70 defines a smaller extension for housing the limb.

[0059] In order to improve the adaptability of the baby carrier to the different sizes that the infant may have, both in terms of body size and during growth, the baby carrier 1 may comprise additional elements.

[0060] In particular, the infant carrier 1 may further comprise a pair of strips **6.** If present, the strips 6 are also essentially membrane-based elements.

[0061] Furthermore, the strips 6 are preferably also integral to the main portion 2 and connected at least to the main portion 2 mutually mirroring the main trajectory 2a. Therefore, each of the strips 6 is placed between a flap 5 and the belt 3 so as to be able to support, when the baby carrier 1 is in use, a lower portion of the torso of the infant. In addition, preferably, each of the strips 6 is constrained to the main portion 2 exclusively abutting, and approximately parallel to, the main trajectory 2a, protruding transversely to the main trajectory 2a from the main support 2, so as to overlap with at least part of the first face 20 without being constrained therein.

[0062] If the strips 6 are present, in order to advantageously create at least the second configuration of the bands 7, the baby carrier 1 can further comprise particular coupling means **8.**

[0063] The coupling means 8, if provided, are configured to removably constrain each respective band 7 to the main portion 2. Therefore, the coupling means 8 allow, as already mentioned, the second configuration to be determined.

[0064] Each of the coupling means 8 therefore comprises at least a first component **80** and a second component **81.**

[0065] The first component 80 is preferably positioned at a respective end of the band 7. Therefore, the first component 80 is integral to the band 7.

[0066] The second component 81 can obviously be coupled to the first component 80. Therefore, the second component 81 is positioned at a respective side of

the main portion 2 between the first face 20 and the respective strip 6.

[0067] Therefore, the second component 81 is hidden behind the strip 6 so that it is separated from the infant by the respective strip 6 when the baby carrier 1 is in use. As already mentioned, the bands 7 can define a plurality of different first configurations.

[0068] In this regard, preferably, the belt 3 can comprise, at the internal side 30, at least a pair of proximal areas **30a,** a pair of distal areas **30b** and a pair of intermediate areas **30c.**

[0069] The proximal areas 30a are preferably mirror images of the main trajectory 2a and placed close to the main trajectory 2a.

[0070] The distal areas 30b are also mirror images of the main trajectory 2a but placed at a distance from the main trajectory 2a.

[0071] Therefore, the intermediate areas 30c are preferably mirror images of the main trajectory 2a and each placed between a respective proximal area 30a and a respective distal area 30b.

[0072] Therefore, each band 7 and/or each strip 6 is, advantageously, removably constrained to the belt 3 in such a way as to be able to define at least a first extreme position, a second extreme position and an intermediate position, each corresponding to a different first configuration.

[0073] In the first extreme position, the band 7 and/or the strip 6 is constrained to the belt 3 at a proximal area 30a, as shown in Fig. 5a.

[0074] In the second extreme position, the band 7 and/or said strip 6 is constrained to the belt 3 at a distal area 30b, as shown in Fig. 5b.

[0075] In the intermediate position, the band 7 and/or the strip 6 is constrained to the belt 3 at an intermediate area 30c, as shown in Fig. 5c.

[0076] As is clear from Figs. 5a-5c each positioning involves the expansion or reduction of the infant's support area and thus allows the baby carrier 1 to be adapted to the child's different build or growth stages.

[0077] Even more specifically, in this case too, specific elements may be required to implement the constraint.

[0078] Preferably, the baby carrier 1 further comprises constraint means **9.**

[0079] The constraint means 9 are configured to removably constrain each a respective band 7 and/or a respective strip 6 with the belt 3. Therefore, the constraint means 9 are the elements that physically form the extreme and intermediate positions.

[0080] In particular, each of the constraint means 9 comprises first elements **90,** second elements **91** and/or third elements **92.**

[0081] The first elements 90 are preferably each positioned at a respective zone 30a, 30b, 30c. Naturally, the first elements 90 can be coupled to the second element 91 and/or the third element 92.

[0082] Furthermore, the first elements 90, in even more detail, may comprise a first portion **90a** and a second portion **90b.**

[0083] The first portion 90a and second portion 90b are preferably adjacent transversely to the main trajectory 2a. Furthermore, the first portion 90a and the second portion 90b are designed for coupling, at the same area 30a, 30b, 30c, distinctly with the second element 91 or the third element 92, as can be seen in Figs. 5a-5c.

[0084] Furthermore, in even more detail, preferably the zones 30a, 30b, 30c are at least partly overlapping such that the second portion 90b of the proximal zone 30a corresponds to the first portion 90a of the intermediate zone 30c and the second portion 90b of the intermediate zone 30c corresponds to the first portion 90a of the distal zone 30b.

[0085] Naturally, this conformation is more compact, but alternatively distinct zones 30a, 30b, 30c could be provided in order to increase the range of possible first configurations.

[0086] The second element 91, as already mentioned, can be coupled with each of the first elements 90 and is positioned at a respective end of the band 7.

[0087] The third element 92 can also be coupled with each of the first elements 90. It is also positioned at a respective end of the strip 6.

[0088] Both the coupling means 8 and the constraint means 9 may comprise quick-release buttons, Velcro or other devices which allow for the easy and mutual constraint of the components 80, 81 and the elements 90, 91, 92. They can also be of the same type.

[0089] In fact, in this sense, the first component 80 and the second component 91 can be mutually corresponding, that is, be made by the same object.

[0090] The operation of the baby carrier 1 previously described in structural terms is analogous to that of any baby carrier.

[0091] However, the baby carrier 1 comprises bands 7 which allow for the creation of a plurality of different configurations, in particular the second configuration, which is adaptable to a wide range of infant body builds and uses of the baby carrier 1.

[0092] In fact, the baby carrier 1 according to the invention performs important advantages. In particular, the baby carrier 1 is able to support an infant in a stable and effective manner, above all, but not only, thanks to the presence of the bands 7. Furthermore, the baby carrier 1 is comfortable and safe, in particular by avoiding unwanted movements of the infant, especially, but not only, if the latter is small in build, especially, but not only, thanks to the possibility of creating the second configuration.

[0093] In conclusion, the baby carrier 1 allows an infant to be efficiently supported in any positioning mode, in particular both facing the adult and the outside environment. The invention is susceptible to variations within the scope of the inventive concept defined by the claims.

[0094] Within this scope, all details can be replaced with equivalent elements, and materials, shapes, and sizes can be any.

Claims

1. Baby carrier (1) comprising:

- a main support portion (2) designed to support an infant, developing at least along a main trajectory (2a) such that, when said baby carrier (1) is in use, an infant can be supported at their torso starting from the buttocks passing between the lower limbs and defining a first face (20) intended to contact said infant when said baby carrier (1) is in use and a second face (21) placed opposite said first face (20) so as to face outwards when said baby carrier (1) is in use;
- a belt (3) integral to said main portion (2), developing transversely to said main trajectory (2a) and configured to be belted around the torso of a preferably adult user when said baby carrier (1) is in use;
- one or more shoulder straps (4) integral to said main portion (2) and connected to said main portion (2) at positions of said main portion (2) reciprocally mirroring each other with respect to said main trajectory (2a) and at one side of said main portion (2) opposite said belt (3) in such a way that it can rest stably on both shoulders of said user when said baby carrier (1) is in use;
- a pair of flaps (5) integral to said main portion (2) and connected, mutually mirroring said main trajectory (2a), to said main portion (2) each at a respective side of said main portion (2) included between said belt (3) and said one or more shoulder straps (4) developing transversely to said main trajectory (2a) so as to be able to envelop said infant below the axillary area of said infant;

and **characterized in that** it further comprises:

- a pair of bands (7) integral to said main portion (2) and connected, reciprocally mirroring said main trajectory (2a), each to a respective flap (5) and to one between said main portion (2) and said belt (3) so as to make a slot (70) within which may be inserted, when said baby carrier (1) is in use, a said lower limb.

2. Baby carrier (1) according to claim 1, wherein each said band (7) is removably constrained to one between said main portion (2) and said belt (3) in such a way that at least the following can be defined:

- a first configuration wherein said band (7) is constrained to said belt (3) and said slot (70) is bounded by at least part of said band (7), said flap (5), said main support (2) and said belt (3) defining a greater extension for housing said limb, and
- a second configuration wherein said band (7) is constrained to said main support (2) and said slot (70) is bounded by at least part of said band (7), said flap (5) and said main support (2) defining a lesser extension for the housing of said limb.

3. Baby carrier (1) according to any of the preceding claims, further comprising a pair of strips (6) integral to said main portion (2), connected at least to said main portion (2) reciprocally mirroring said main trajectory (2a), and each:

- placed between a said flap (5) and said belt (3) so as to be able to support, when said baby carrier (1) is in use, a lower portion of the torso of said infant, and
- constrained to said main portion (2) exclusively abutting, and approximately parallel to, said main trajectory (2a), protruding transversely to said main trajectory (2a) from said main support (2), so as to overlap with at least part of said first face (20) without being constrained therein.

4. Baby carrier (1) according to claims 2-3, further comprising coupling means (8) configured to removably constrain each a respective said band (7) with said main portion (2) so as to determine said second configuration and each comprising:

- a first component (80) positioned at a respective end of said band (7), and
- a second component (81) that can be coupled with said first component (80) and positioned at a respective side of said main portion (2) between said first face (20) and said respective strip (6) so as to be separated from said infant via said respective strip (6) when said baby carrier (1) is in use.

5. Baby carrier (1) according to any preceding claim, wherein said belt (3) defines an internal side (30) capable of facing said torso and including at least:

- a pair of proximal areas (30a) mirroring said main trajectory (2a) and placed close to said main trajectory (2a),
- a pair of distal areas (30b) mirroring said main trajectory (2a) and placed at a distance

from said main trajectory (2a), and
- a pair of intermediate areas (30c) mirroring said main trajectory (2a) and each placed between a respective said proximal area (30a) and a respective distal area (30b);

and each said band (7) and/or each strip (6) is removably constrained to said belt (3) in such a way that at least the following can be defined:

- a first extreme position where said band (7) and/or said strip (6) is constrained to said belt (3) at a said proximal area (30a),
- a second extreme position where said band (7) and/or said strip (6) is constrained to said belt (3) at a said distal area (30b), and
- an intermediate position where said band (7) and/or said strip (6) is constrained to said belt (3) at a said intermediate area (30c).

6. Baby carrier (1) according to the preceding claim, further comprising constraint means (9) configured to removably constrain each a respective said band (7) and/or a respective strip (6) with said belt (3) so as to accomplish said extreme and intermediate positions and each comprising:

- first elements (90) each positioned at a respective said zone (30a, 30b, 30c),
- a second element (91) that can be coupled with each of said first elements (90) and positioned at a respective end of said band (7), and/or
- a third element (92) that can be coupled with each of said first elements (90) and positioned at a respective end of said strip (6).

7. Baby carrier (1) according to the preceding claim, wherein each of said first elements (90) comprises a first portion (90a) and a second portion (90b) adjacent transversely to said main trajectory (2a) and designed to couple, at a same said zone (30a, 30b, 30c), distinctly with said second element (91) or said third element (92), and said zones (30a, 30b, 30c) are at least partially overlapping such that said second portion (90b) of said proximal zone (30a) corresponds to said first portion (90a) of said intermediate zone (30c) and said second portion (90b) of said intermediate zone (30c) corresponds to said first portion (90a) of said distal zone (30b).

8. Baby carrier (1) according to at least claims 4 and 6, wherein said first component (80) and said second element (91) are mutually corresponding.

9. Baby carrier (1) according to any of the preceding claims, wherein each of said flaps (5) is connected to a respective said shoulder strap (4).

10. Baby carrier (1) according to the preceding claim, wherein each of said flaps (5) is constrained to said belt (3) and develops at said second face (21) of said main portion (2) in such a way that it does not contact said infant when said baby carrier (1) is in use and so that said belt (3) and said main portion (2) are both directly mutually constrained and indirectly mutually constrained through each of said shoulder straps (4).

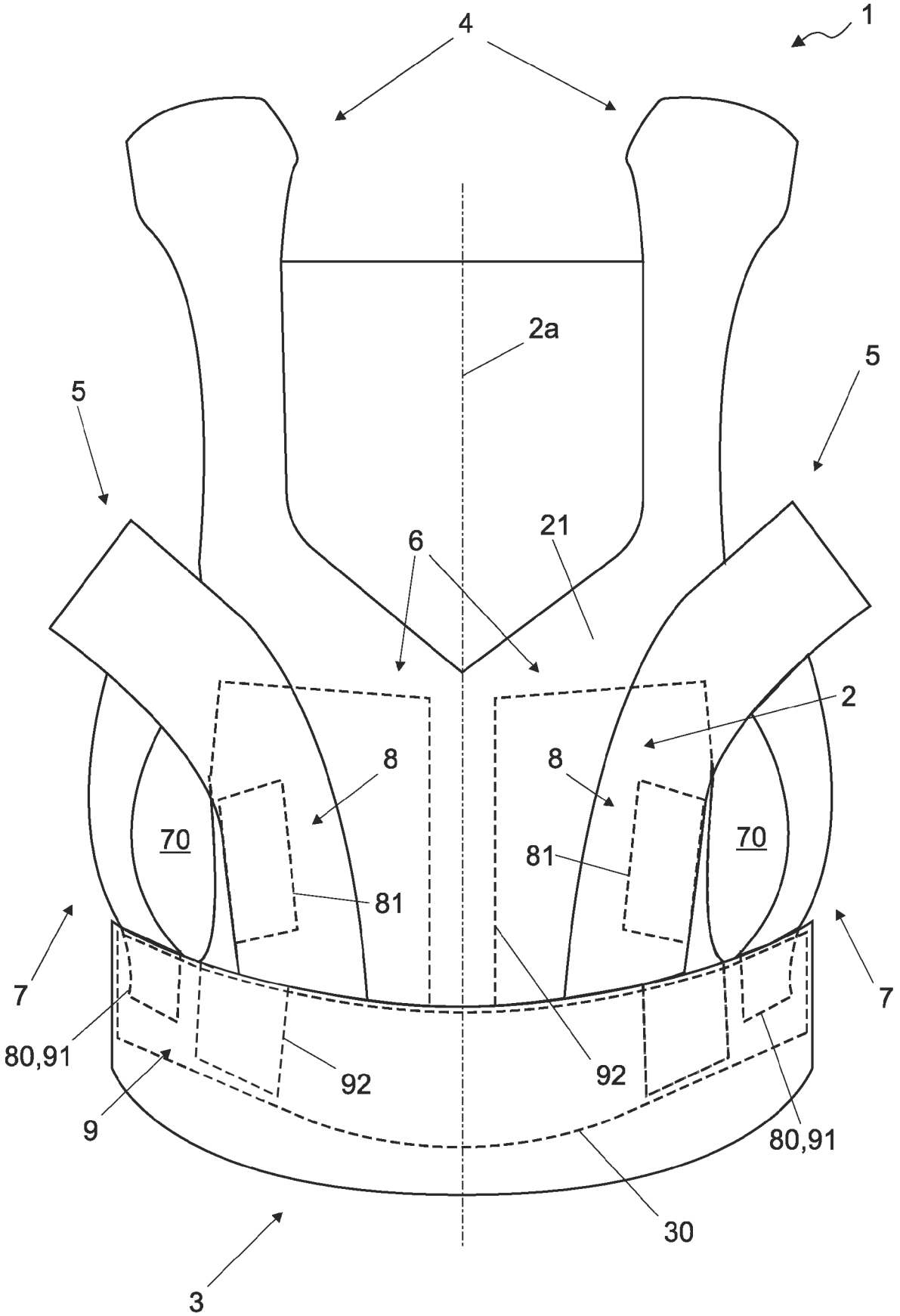

Fig. 1

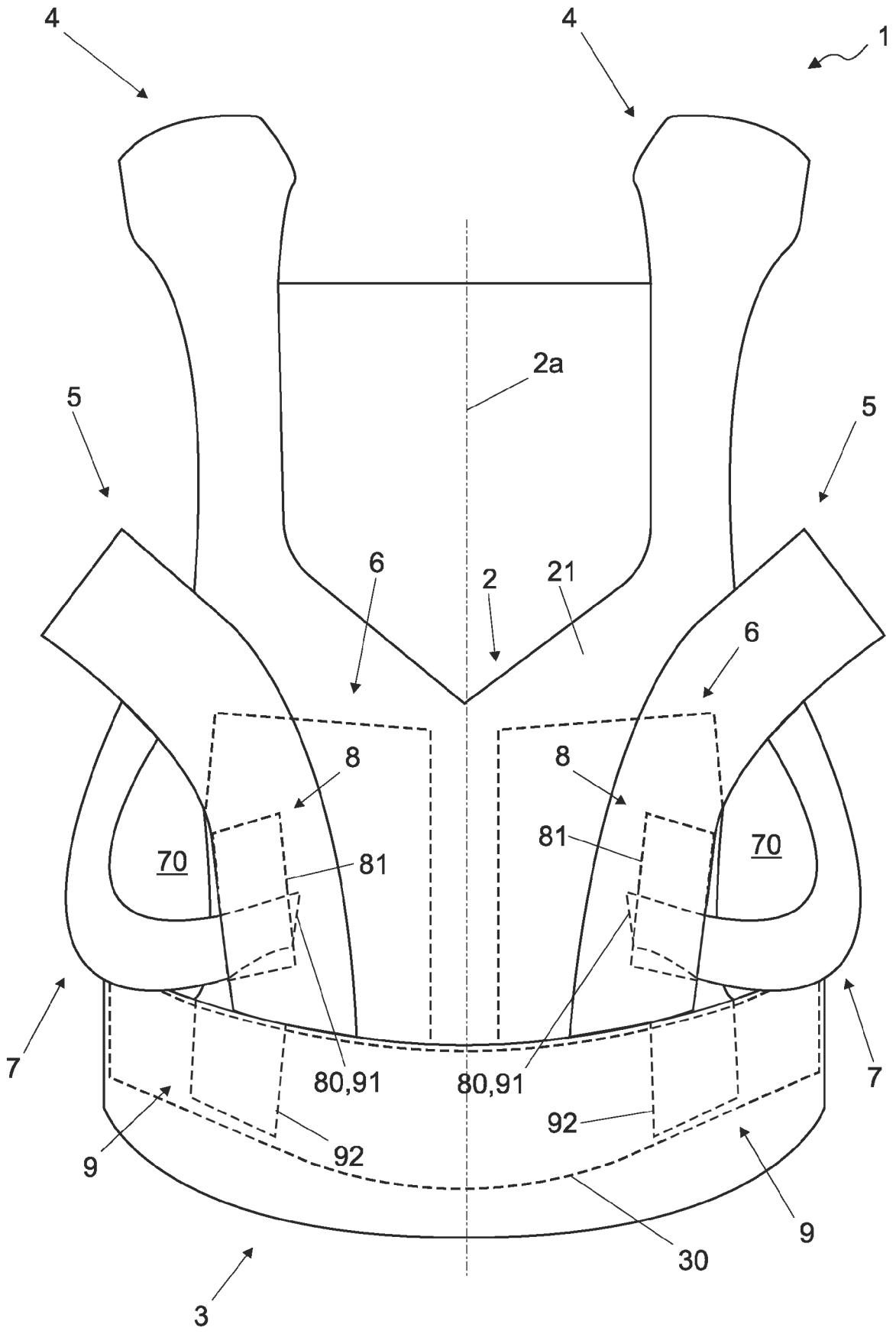

Fig. 2

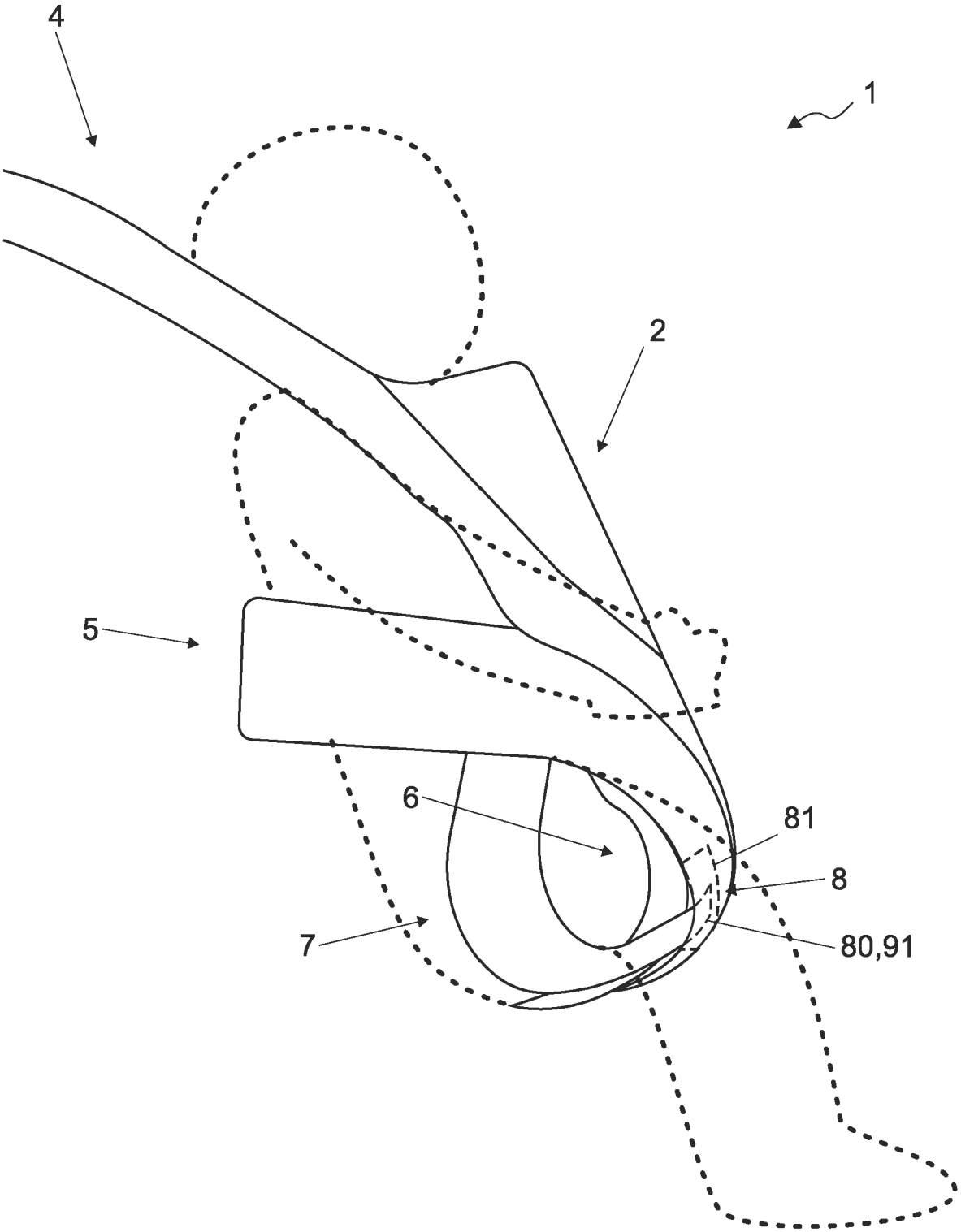

Fig. 3

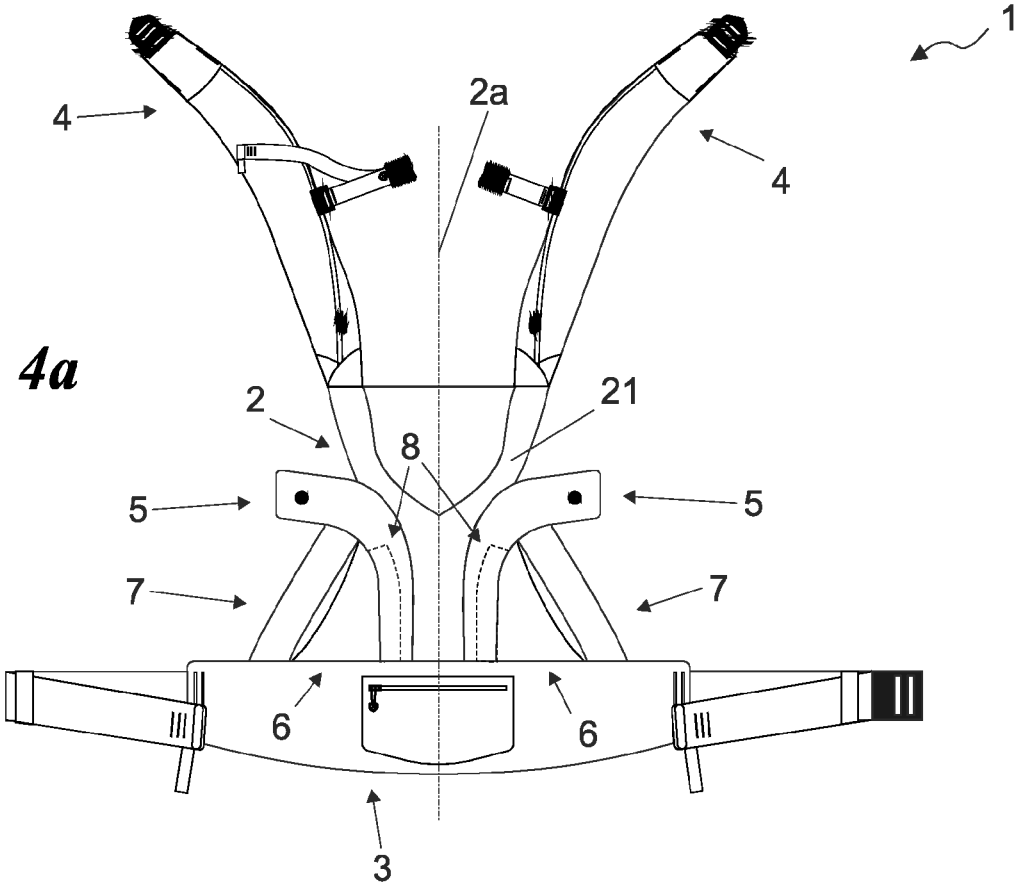

Fig. 4a

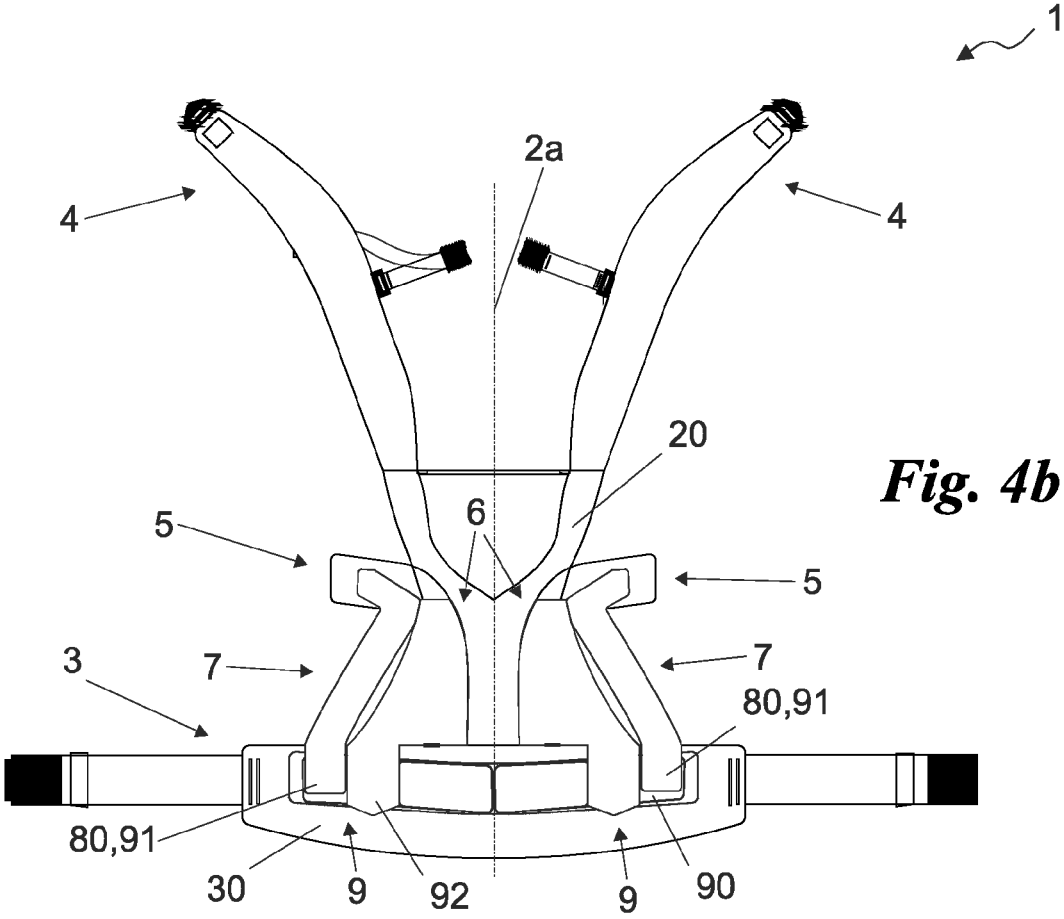

Fig. 4b

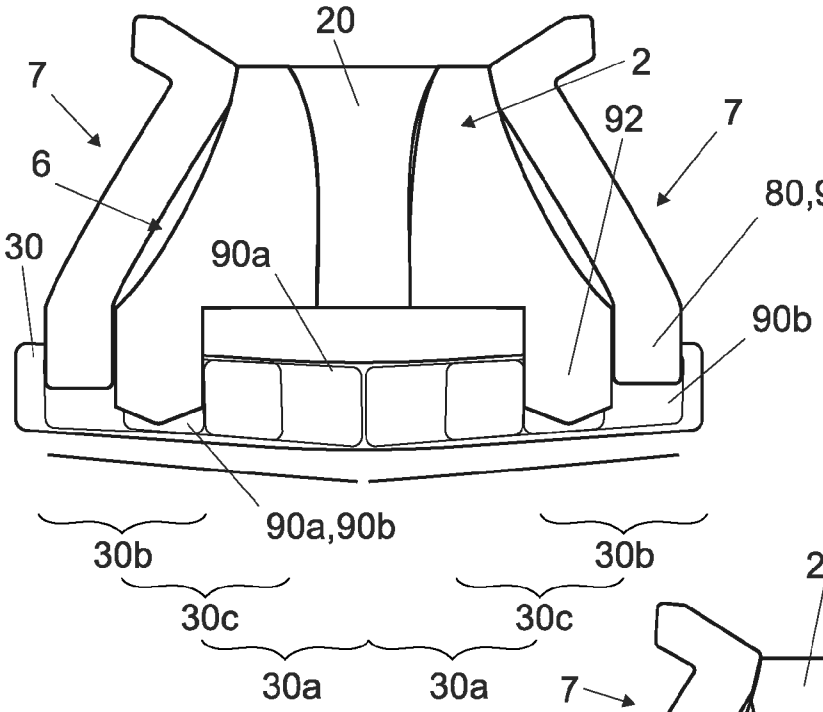

Fig. 5a

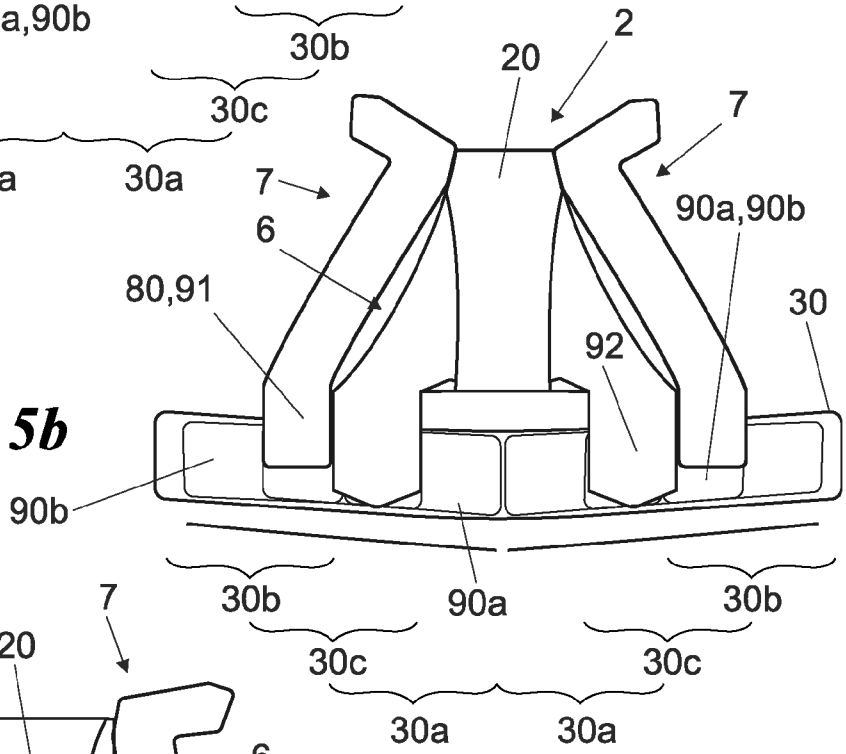

Fig. 5b

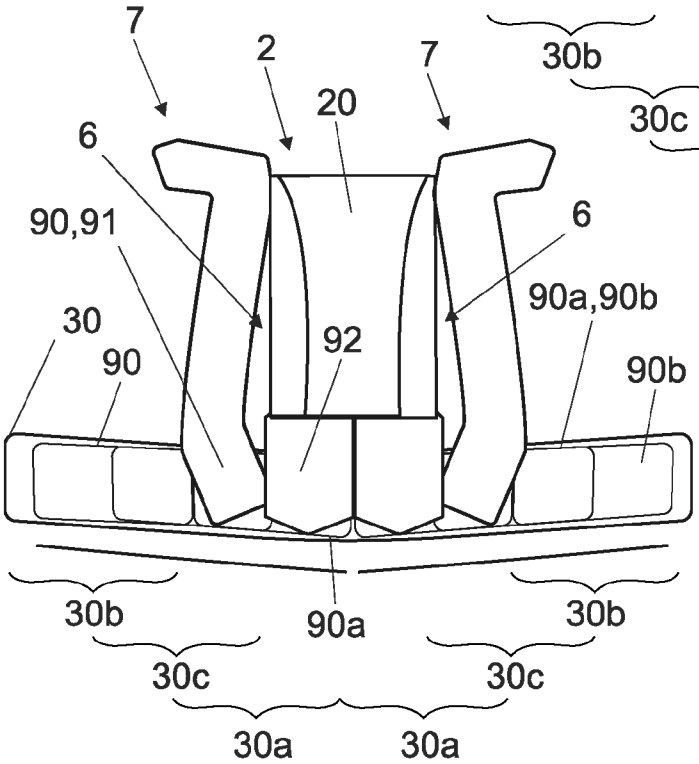

Fig. 5c

Europäisches Patentamt
European Patent Office
Office européen des brevets

EUROPEAN SEARCH REPORT

Application Number
EP 26 16 9562

DOCUMENTS CONSIDERED TO BE RELEVANT

Category	Citation of document with indication, where appropriate, of relevant passages	Relevant to claim	CLASSIFICATION OF THE APPLICATION (IPC)
X	US 2011/186605 A1 (FAVORITO JULIA [US] ET AL) 4 August 2011 (2011-08-04) * paragraph [0023] - paragraph [0032]; figures 1-17 * -----	1-4,8-10	INV. A47D13/02
X	JP 2024 150261 A (CAR MATE MFG) 23 October 2024 (2024-10-23) * paragraph [0018] - paragraph [0037]; figures 1-10 * -----	1-4,8-10	
X	JP 2009 082551 A (LUCKY IND) 23 April 2009 (2009-04-23) * paragraph [0016] - paragraph [0029]; figures 1-7 * -----	1-4,8-10	

TECHNICAL FIELDS SEARCHED (IPC)

A47D

The present search report has been drawn up for all claims

1

Place of search	Date of completion of the search	Examiner
The Hague	21 August 2026	Kus, Slawomir

CATEGORY OF CITED DOCUMENTS

X : particularly relevant if taken alone
Y : particularly relevant if combined with another document of the same category
A : technological background
O : non-written disclosure
P : intermediate document

T : theory or principle underlying the invention
E : earlier patent document, but published on, or after the filing date
D : document cited in the application
L : document cited for other reasons
.....
& : member of the same patent family, corresponding document

EPO FORM 1503 03.82 (P04C01)

ANNEX TO THE EUROPEAN SEARCH REPORT ON EUROPEAN PATENT APPLICATION NO. EP 26 16 9562

This annex lists the patent family members relating to the patent documents cited in the above-mentioned European search report.
The members are as contained in the European Patent Office EDP file on
The European Patent Office is in no way liable for these particulars which are merely given for the purpose of information.

21-08-2026

Patent document cited in search report	Publication date	Patent family member(s)	Publication date
US 2011186605 A1	04-08-2011	NONE	
JP 2024150261 A	23-10-2024	NONE	
JP 2009082551 A	23-04-2009	NONE	

EPO FORM P0459

For more details about this annex : see Official Journal of the European Patent Office, No. 12/82